DESIGN AND DEVELOPMENT OF RF OVER FIBER TRANSMITTER



By

Keerthipriya

August, 2020

OBJECTIVE

The PRATUSH/SARAS Receiver comprises an antenna with Analog Front End Amplification unit and an Analog Signal Conditioning Unit at the Back End optically isolated from front end by OFC (Optic Fiber Cables). In the front end, the RF signal from the antenna after amplification is fed to the Laser diode (LD). The Optical signal after passing through the Fiber is received by Photodiode (PD) at the back End, amplified and passed through the Signal Conditioning unit. The motive behind using Optical Fibers is to enhance the reverse isolation between the Back End and Front end units and also to have galvanic isolation. The existing LD and PD modules are COTS Laser transmitters and Receivers which provide inbuilt amplification in addition to isolation. But, the COTS modules adds certain frequency structures in the final spectrum owing to the presence of Switched Mode power supplies inside the modules. Additionally, few spectral anomalies are also present. This makes it difficult to identify the desired EOR signals. To eliminate the issues in the COTS unit discrete Laser diode transmitter with built in isolator and operating with linear power supply were designed and incorporated in the SARAS system and studied in the past. The experience and the lessons learnt from that led to have a feedback control requirement to be incorporated. The Laser diode used in the design, incorporates a feedback photodiode and an additional inbuilt optical isolator providing an isolation of around 30dB in addition to the Optic Fiber isolation. Moreover, to enhance the performance of the module, this design incorporates a feedback loop for the laser diode power stability control. This report details about the design, development and testing of the LD module with feedback control for PRATUSH/SARAS. The first two chapters explains about Laser diode, the modulation techniques, and the noise characteristics of the diodes. The third chapter gives a detailed account of the Laser driver circuits and the control circuitry. The fourth chapter deals with the Laser Diode schematic, testing and the experimental results.

ACKNOWLEDGEMENTS

I thank Mr.Somashekar for his continuous guidance and support on the design, development and testing of the module. The discussions with him always helped me to develop deep understanding the circuit. I would also like to express my gratitude to Ms.Kasturi for her expert suggestions in the PCB CAD design as well as her guidance during assembly and enclosure design. I would also like to thank the mechanical department for their support. Special thanks to Project team mate Goutam for his help in the Laboratory. Thanks to the entire PRATUSH team, as the weekly discussion helped me to understand the challenges and requirement.

Table of Contents

OBJECTIVE

ACKNOWLEDGEMENT

1. LASER DIODES

1.1 Introduction…….....……..1

1.2 LASER Diode..…..……...……...…….....2

1.3 TYPES OF LASERS..……..2

a. FABRY PEROT Resonator……...…….2

b. Distributed feedback Laser……..……...3

2. LASER CHARACTERISTICS

2.1 Current vs Power……..5

2.2 Threshold Current……..……..6

2.3 Laser Modulation……6

a. Intensity Modulation……..6

b. Modulation Bandwidth……..8

2.4 Noise Characteristics…..……..9

a. Relative Intensity noise……...……...9

b. Mode Partition Noise……9

c. Mode Hopping Noise……...10

d. 1/f Noise……...……10

3. LASER DRIVER

3.1 AUTOMATIC CURRENT LOOP……...……..14

3.2 AUTOMATIC POWER LOOP……14

3.3 ANALOG LASER DRIVER CIRCUIT……14

4. LASER DRIVER CIRCUIT FOR PRATUSH/SARAS

4.1 LASER DIODE SPECIFICATIONS……....16

4.2 OP-AMP SPECIFICATIONS……...17

4.3 WORKING OF THE CIRCUIT…….....18

4.4 PRELIMINARY CHARACTERIZATION OF THE CIRCUIT……..……...….20

FUTURE WORK……....24

CONCLUSION……...24

1. LASER DIODES AND THEIR CHARACTERISTICS

1.1 INTRODUCTION:

The Analog Subsystem in SARAS and PRATUSH utilizes Amplifiers, Bandpass filters, noise sources and Couplers for amplifying, calibrating and conditioning the signal received from the antenna. The design of analog subsystem is optimized to minimize the frequency structures arising from the leakage and reflections from various components in the signal path. In order to avoid the EMI from the digital subsystem, the antenna is deployed far away from the digital system. But, deploying the entire Analog subsystem far away from the digital system will make it complex, expensive, bulky and power hungry. On the other hand, positioning of LNA faraway from the antenna will increase the noise figure of the system, including issues with calibration and systematics due to reflection. Hence, the optimum design was to have the Analog receiver divided as two blocks - Front End with the Dicke Switch, Calibration Noise source and the LNA placed very close to the antenna. Back End with the Hybrid couplers followed by two separate channels of Band Pass Filters and Amplifier stages placed near to the digital spectrometer. To have a high degree of isolation both conductive and radiative, from the digital receiver system, the SARAS system has the analog frontend receiver with Radio over fiber, including a separation of more than 100m. The existing Isolator is COTS RF over Optic Fibre Transmitter and Receiver modules. Based on the previous experiences, The COTS modules introduces an unwanted structure at lower frequency contributed by the SMPS power supply inside the modules. Therefore an alternative to the COTS had been designed in the past for SARAS with Laser diode having in-built isolator. But, the experiences from the design have now led to the development of Laser diode with an in-built photodiode connected in APC loop configuration to stabilize the Optical power and the effect of temperature changes. The Photodiode receiver at the Back End demodulates and amplifies the signal before passing it to the Coupler. The modules' design and testing are elaborated in this report. This chapter gives an introduction to the Laser Diodes and their important characteristics.

1.2 LASER DIODE:

The LASER (Light Amplification by Stimulated Emission of Radiation) diode is a semiconductor PIN diode which emits photons when forward biased. The Silicon PN diode being an indirect Band Gap semiconductor diode, does not emit light when excited by voltage. Therefore, Direct Band Gap semiconductors like GaAs, InP, etc having the virtue of emitting photons are used in Semiconductor Lasers. The emission of photons occur by two mechanisms -Spontaneous emission and Stimulated Emission. Spontaneous emission occurs when an electron in a higher energy state recombines with a hole in lower energy state after the recombination time. This releases photons equivalent to the Energy gap between the states. But, the emitted photons are non-coherent. The Lasing Action will take place only when there are coherent photons generated by stimulated emissions. The stimulation is given through the Bias voltage and the injection current in case of the Semiconductor Laser diodes. The Applied current injects more electrons to the active region and the applied bias excites the electrons to the higher energy levels. This leads to a condition called population inversion. This is called Stimulated Absorption. Structurally, the bias injects more electron hole pairs in the intrinsic (Active) region of the PIN diode. The photons emitted

from the spontaneous recombination of these pairs are trapped in the active region cavity by placing two polished mirrors at the ends. The photons get reflected from the mirrors and they stimulate the excited electrons to combine with more holes before recombination time, thus giving rise to coherent photons in large numbers. Each stimulated emission gives rise to a photon which is in phase with the exciting photon. Thus the number of photons keeps increasing exponentially. This increase increments the gain in the Optical Cavity. When the photons in the active region exceeds the laser threshold conditions, the lasing action commences. In order to maintain the Lasing action, the stimulated emissions should be greater than the Spontaneous emission. The spontaneous emissions which is unavoidable, induces noise in the laser characteristics.

1.3 TYPES OF LASERS:

The LASER with P-N Junction of same material is called Homojunction Laser. But, the more common lasers are heterojunction based Lasers. The radiative properties of the junction can be improved by using heterojunction. The heterojunction is formed between two single crystals of different bandgap energies. The heterostructures have a small active confinement region for the minority carriers which reduces their diffusion length and thus gives more irradiance. The threshold current is also reduced with the heterostructures. The heterojunction LASERs are further classified based on the number of modes as – Multimode and Single Mode Lasers. Fabry Perot resonator cavity is the most common and simplest multimode LASER diode. Among the different types of the single mode laser the DFB LASER will be discussed in detail as it is used in our Optical Modules.

a. FABRY PEROT RESONATOR:

The Fabry Perot Resonator consists of a pair of partially reflecting mirrors directed towards each other to enclose the cavity. The laser cavity has lot of resonating modes and the oscillations will take place longitudinally and transversally for all those modes. Each mode is described based on the number of longitudinal and transverse half sinusoidal variations of the Electromagnetic Fields along the major axis of the cavity. The Longitudinal modes are related to the length L of the cavity and since the L can be larger than the wavelength of light, there will be multiple longitudinal modes. The lasing mode should satisfy the gain and phase conditions as given in Eq.1-2. Eventually, only one mode will satisfy both the conditions, although there will be multiple modes satisfying only the phase condition. These modes appear at the output as the side modes. Thus, the Fabry Perot resonator cavity output spectrum will have multiple modes.

$$m = \frac{L}{\lambda / 2n} \tag{1}$$

$$g_{th} = \alpha_s + \frac{1}{2L} \ln \frac{1}{R_1 R_2} \tag{2}$$

Here, R_1 and R_2 are the reflectivites and α_s is loss in the cavity.

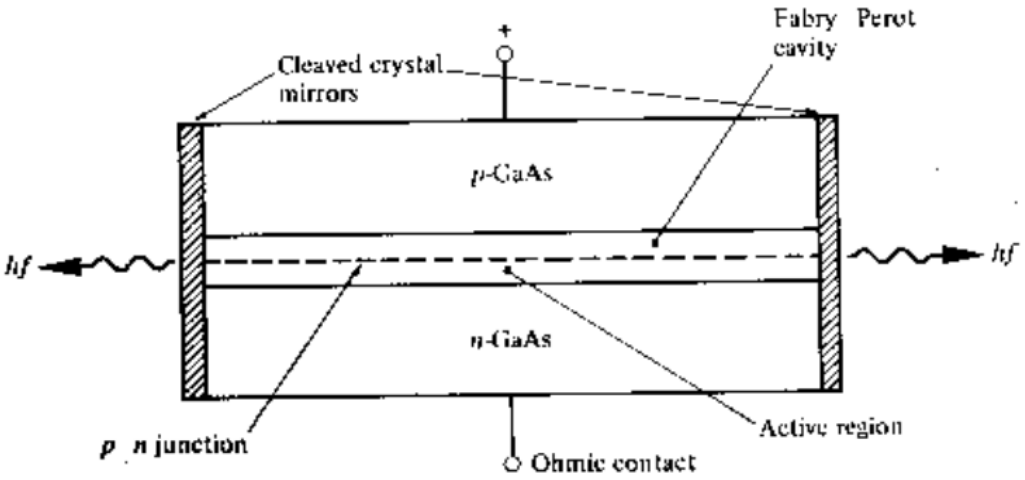

Fig.1 FP cavity resonator

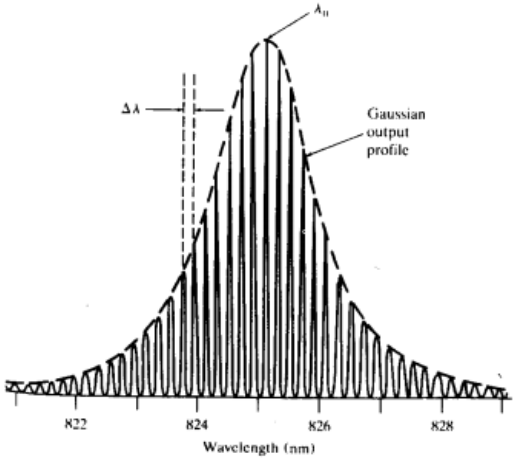

Fig.2 Spectrum of Fabry Perot Resonator indicating the longitudinal modes

The Transverse modes are responsible for the radiation pattern and the angle of the emitted optical power. The Fabry perot Lasers can be used when the multiple modes are not of concern or when the cost has to be reduced.

b. DISTRIBUTED FEEDBACK LASER

The Applications requiring highly precise single mode transmission can make use of the single mode lasers. There are different techniques to obtain single mode transmission. Among them, the most common LASER is the DFB. Here, diffraction gratings are made along the length of the active region to introduce variations in refractive index as shown in Fig.2. The periodical variations in the refractive index causes Braggs scattering. The period of the Bragg scattering is fixed

depending on the desired output wavelength and Bragg's condition has to be satisfied by the wavelength of interest. The wave gets reflected at each interface with 180^0 phase reversal. The wave which travels from low refractive index region to high refractive index region will undergo another 180^0 reversal thus adding up constructively. An advantage of the DFB laser is that the optical feedback occurs throughout the length of the cavity. This mitigates the need for end mirrors. The gratings will allow only one mode to travel while suppressing the other modes. Therefore Side mode suppression Ratio (SMSR) is an important parameter to be considered in DFB.

Bragg's condition,
$$\beta_0 = \frac{2\pi n_0}{\lambda_B} = \frac{m\pi}{\Lambda} \tag{3}$$

Where, n_0 is the refractive index, Λ is the grating period, m is the mode.

ADVANTAGES OF DFB:

1. The DFB exhibits very narrow linewidth when compared to Fabry Perot Resonator.
2. It exhibits reduced changes in the wavelength sensitivity for changes in temperature and injection current.
3. It provides superior longitudinal mode selection over the FP Lasers.

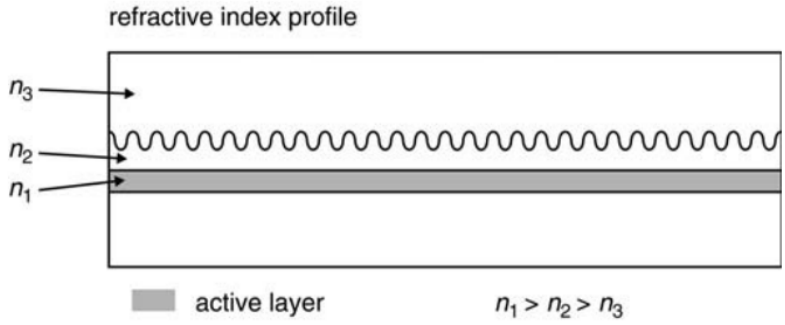

Fig.3 Refractive Index profile of DFB Laser structure (side view)

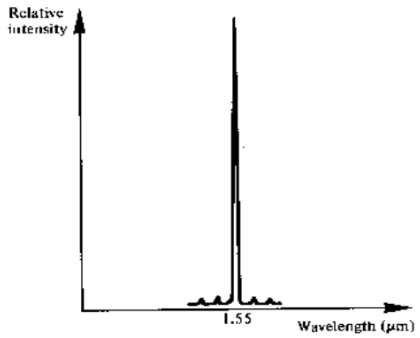

Fig.4 Output Spectrum of a typical Single Mode LASER

2. LASER CHARACTERISTICS

2.1 CURRENT VS POWER:

The idealized light output vs Power characteristic is shown in Fig.5. The threshold current is indicated clearly in the Figure and the power output is very less below the threshold current. Once the input current crosses the threshold, the output power begins to increase due to the stimulated emission. Below the threshold, the power is due to the spontaneous emission. The power and the current are related by the Eq.4.

$$P_{out} = \eta \frac{h\upsilon}{q}\left(I - I_{th}\right) \tag{4}$$

η is the external quantum efficiency

h is the Planck's constant

I_{th} is the Threshold current

Internal Quantum Efficiency is the ratio of radiative recombination to the carrier recombination.

External Quantum Efficiency is the ratio of the increase in the number of photons generated to the increase in the injected electrons.

The efficiency in converting the input electric power to output optical power is

$$\eta_e = \frac{P_o}{IV} * 100 \tag{5}$$

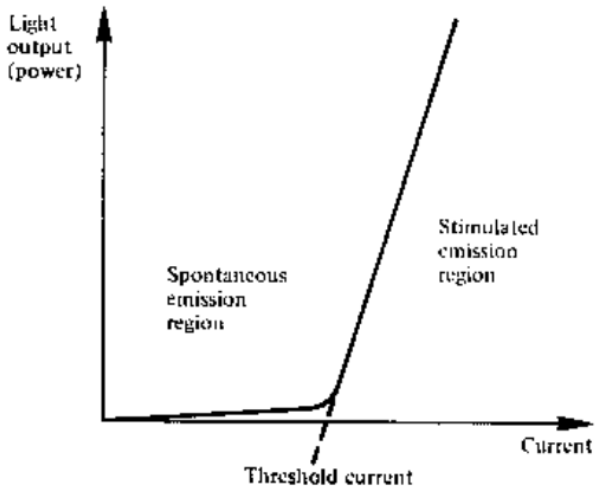

Fig.5 Current vs Power characteristics

2.2 THRESHOLD CURRENT :

The Threshold current of heterojunction based lasers are less when compared to the homojunction laser. Typical order of the threshold current is 10-50 mA. The Threshold current has a very strong dependence on Temperature.

$$I_{th} \sim \exp\left(\frac{T}{T_0}\right) I_{th} \sim \exp\left(\frac{T}{T_0}\right)$$

T_0 is the characteristic temperature. GaAlAs lasers exhibit a T_0 of 150 ... 200 K, InGaAsP lasers suffer from a much stronger temperature dependence with T_0 of 40 ... 70 K. Threshold current increases with increase in temperature. The increase in the threshold current decreases the efficiency as more current has to be injected to give the same amount of power. Therefore while driving the Laser diode, suitable control circuitry is included to maintain constant optical power by regulating the bias current.

2.3 LASER MODULATION

The analog and digital signal data can be transmitted by the Laser by modulating the Intensity, Phase or frequency of the Laser. The modulation can be done internally or externally. In internal modulation, the Laser injection current is modulated to produce the change in the Laser Output. In External modulation, modulators are placed at the output of the Laser Output. RF signals can be sent over the Fiber by intensity modulation. Hence, that will be elaborated in this section.

a. INTENSITY MODULATION

Ideally change in the Injection current causes change in the Optical Power. Signals of lower frequencies till 10MHz will follow the same Light Power – current characteristics. At higher frequencies, the delay time and ringing effects have to be taken in consideration. The Fig.6 shows the modulation of the Laser power with a digital signal.

The bias current value should be chosen appropriately to avoid the turn on delay. The Turn On delay can be avoided if the bias current is sufficiently above the threshold current. This will avoid the switching off of the LASER during the negative cycles. The modulation limit is set by the damping frequency. Larger frequency limit can be obtained with lower gain compression. The gain compression depends on the photon number in one specific laser mode. In multimode lasers, the photon number is distributed among the multiple modes which causes lesser gain compression. Hence, higher frequency limits can be reached when compared with the single mode laser. Single mode Laser frequency limit can be increased by increasing the doping in active layer or by operating the laser in lower temperatures. Quantum well structures have high applicability in such situations. In Fabry Perot Lasers, the spectral width follows modulation slowly whereas in the DFB the spectral width follows modulation more quickly. In case of FP Lasers, the gain difference between the central mode and the side mode is inversely proportional to the cavity length. If a laser diode is modulated at high data rates the laser spectrum may

broaden due to the transient spectral phenomena. When a sinusoidal signal is used for modulating the intensity, the spectrum broadens for higher modulation index. The plot of spectrum for various modulation indices is shown in Fig.7. Even if a laser diode exhibits a dynamic single-mode emission like a DFB laser, its spectral line is considerably broadened under direct modulation, since the intensity modulation is always accompanied by a frequency modulation. This spectral broadening, also denoted as laser chirp, may yield a considerable limitation for the bit rate-length product that may be transmitted over single-mode fibers. Different spectral components will suffer different delays through the fiber, yielding a pulse broadening at the fiber end and a related dispersion penalty.

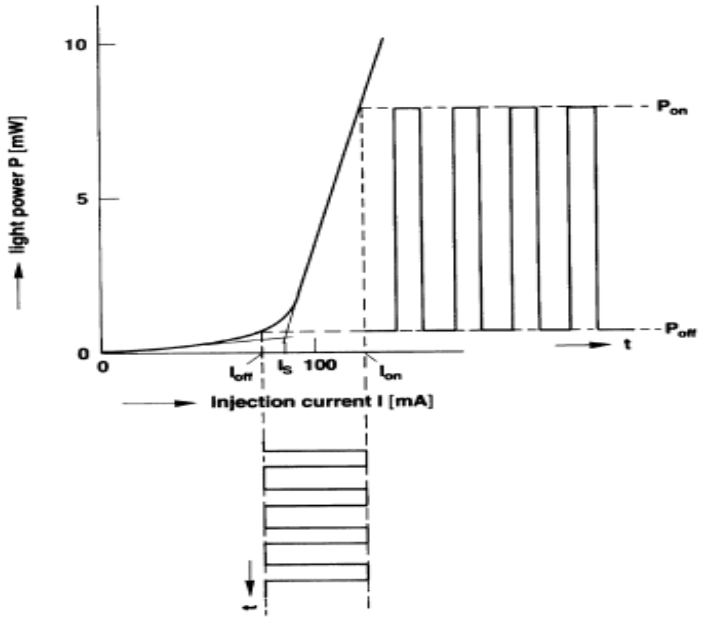

Fig.6 Intensity modulation using Digital Signal

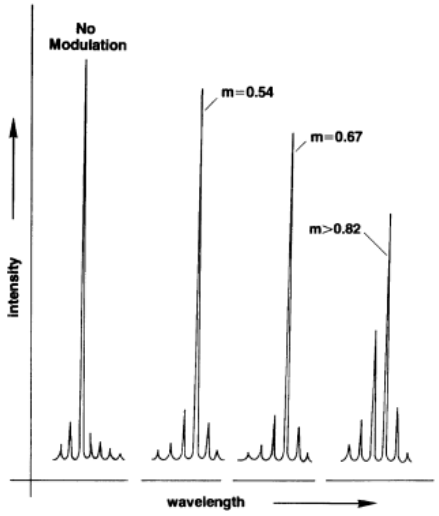

Fig.7 Plot of Spectrum for varying modulation index

b. MODULATION BANDWIDTH:

The modulation bandwidth can be defined in terms of electrical or optical bandwidth. The electrical bandwidth is the frequency at which the output electrical power has dropped to 3dB below its input power. As the optical sources operate down to D.C, only the higher frequency limit is considered. The optical bandwidth is larger than the electrical bandwidth.

Electrical Bandwidth is the ratio of the electrical power at the receiver to the electrical power at the source.

$$RE_e = \frac{(I_{out})^2}{(I_{in})^2}$$

$$RE_e(dB) = 20\log\frac{I_{out}}{I_{in}}$$

Optical Bandwidth is defined as the ratio of the Optical Power Received to the Optical Power transmitted.

$$RE_o = \frac{I_{out}}{I_{in}}$$

$$RE_o(dB) = 10\log\frac{I_{out}}{I_{in}}$$

The half power condition is achieved in Electrical Power ratio when the ratio is 0.707 times the maximum. Whereas for the optical power, the half power condition is when the ratio is 0.5 times the maximum. This validates higher Optical Bandwidth and a comparatively lower electrical Bandwidth.

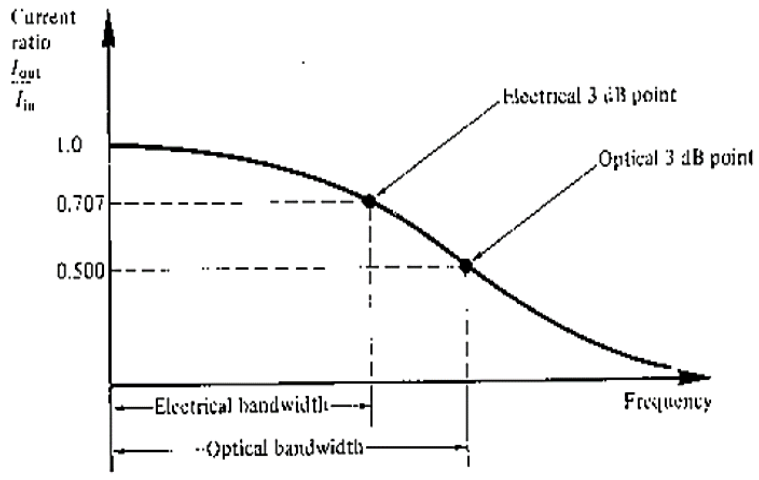

Fig.8 Optical vs Electrical bandwidth

2.4 NOISE CHARACTERISTICS:

a. RELATIVE INTENSITY NOISE:

Relative Intensity Noise relates the noise of the Optical Power to the mean power.

$$RIN = \frac{\langle \delta P^2 \rangle}{\langle P \rangle^2}$$

If the noise is measured with noise bandwidth Δf , then

$$RIN = \frac{2\Delta f W_P(\omega_m)}{\langle P \rangle^2}$$

To measure the *RIN* the optical power is converted to a current after the receiving photodiode and the noise of this photocurrent may be easily measured with an rf-spectrum analyzer. This procedure is correct as long as no additional noise is added in the receiver. An RIN of laser diodes may thus be measured as long as it is considerably larger than the detection limit RIN_Q.

$$RIN_Q = \frac{2\Delta fe}{\langle I \rangle} = \frac{3.2 * 10^{-16} mA}{\langle I \rangle} \frac{\Delta f}{Hz}$$

The RIN is mainly contributed by the spontaneous emissions. Hence, below threshold this noise is predominant. The RIN above threshold is usually around 10^{-14} for 1Hz Bandwidth which is sufficiently low value.

In case of sinusoidal analogue modulation, the SNR is related to the RIN as,

$$SNR = \frac{m^2}{2RIN}$$

m is the modulation index

The intensity noise is different for each mode. Therefore the noise considered for overall modes will be less than the individual mode noise.

b. MODE PARTITION NOISE:

The intensity noise of the total light output of laser diodes is relatively low, however, the partition of the different lasing modes in the total light output fluctuates considerably, yielding the mode partition noise. The mode partition noise is illustrated in Fig. 7.3 which shows the laser spectrum at random times t_1, t_2. The total light output power remains essentially constant, but the relative portion of the modal powers fluctuates. This mode partition noise also occurs in nominally single-mode laser diodes, since even these diodes have small side-modes which contribute to the mode partition noise. The mode partition noise has a low-pass characteristic and the cut-off frequency is essentially determined by the characteristic lifetimes for the side-modes. The mode partition noise

of multimode lasers may be conveniently measured, by detecting the laser light after passing an interferometer, yielding a random transmission for the different lasing modes.

c. MODE-HOPPING NOISE:

The strongest partition noise occurs for a two-mode emission of a nominally single-mode laser if the mode is jumping between two neighboring modes. Each of these modes then suffers a strong partition noise.
According to the analysis in the preceding sections this noise should not be observed if the total light output is measured. However, an increased noise is also observed for the detection of the total light emission, which is denoted as mode-hopping noise. This mode-hopping noise represents a severe limitation for optical disc applications, as well as for optical fibre communication. This noise, however, is still lower, by several orders of magnitude, than the partition noise. Therefore even a minute wavelength dependent loss might yield the observed mode-hopping noise. Such a wavelength-dependent loss not only occurs in external optical systems, it may also be represented by a wavelength-dependent external quantum efficiency. If the temperature is changed for a Fabry-Perot-type laser, one cannot avoid the lasing mode hopping to another wavelength, since the temperature dependence of the gain peak wavelength and the resonance wavelength for a distinct lasing mode differ from one another. In order to avoid the associated noise one requires a stable mode-hopping, which means that after mode-hopping the mode should be stable.

d. 1/F INTENSITY NOISE:

The *1/f* noise is observed for frequencies lower than about 100 kHz and therefore it becomes important if such low frequencies must be detected as, for example, for fibre sensors. Above threshold the spectral noise density of the 1/f noise is nearly independent of the injection current.

In order to avoid these high noise levels it is advisable to use modulation schemes in the optical systems which avoid the light detection at very low frequencies. The physical origin of this noise is not yet quite clear. It is assumed that the presence of carrier traps in the vicinity of the active layer is responsible for the observed *1/f* noise.

3. LASER DRIVER

For driving the laser diode a suitable electronic circuit is required. Electrically, a laser diode behaves like a usual *pn-diode* which is biased in the forward direction. Since the impedance of such a diode is very low, the driving circuit should act as a current source and should also be stable under a low load impedance. It should also allow for a sufficient current swing with respect to the required swing in optical power. It is particularly attractive to use electronic integrated circuits for driving the laser diode. If integrated circuits based on Si are used, a high speed and a sufficiently high current swing may be obtained with emitter-coupled bipolar transistor circuits, allowing for bit rates up to about 2.5 Gbit/s.

A general flow of the laser diode driver circuit is shown in Fig.9 to get an idea of the methodologies involved in driver circuit.

In LASERs we can choose to stabilize the laser current or the photodiode current. Depending on that we have two different feedback methods. Automatic Current loop or Automatic power loop. The Fig.9 gives a flowchart depicting the flow of control signal. Both the current control and power control flow is depicted parallel in the chart.

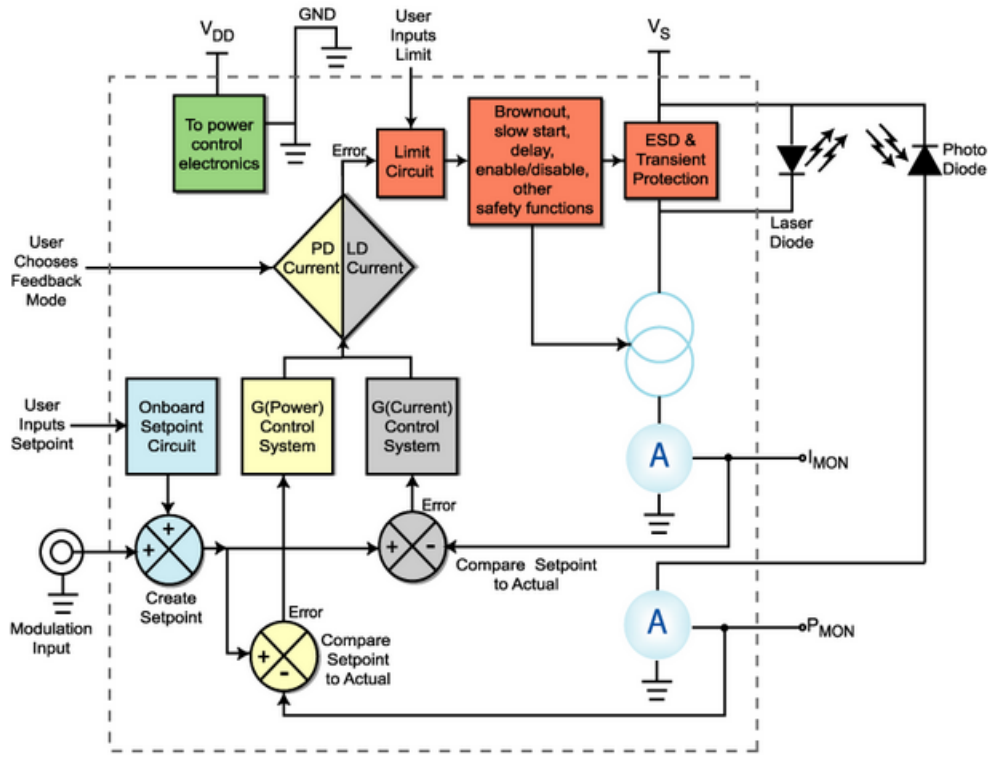

Fig.9. Flow control of the driver circuit

Laser Diode: The function of the Laser Diode Driver is to provide current to the laser diode. The wavy arrows indicate light exiting the package. A huge array of applications exist for laser diodes. These can include spectroscopy, remote sensing, medical diagnostic & analytical equipment,

particle sizing & counting, welding & materials processing, and a myriad of other applications. It often is abbreviated as LD.

Photodiode: Most often, a monitor photodiode is integrated into the laser diode package. It produces a current somewhat proportional to the output laser diode optical power. Each laser diode package is different and usually the photodiode transfer function varies widely. The wavy arrows indicate light entering the package. It often is abbreviated as PD.

Feedback Mode: Most laser diode drivers will allow control based on either laser diode current or photodiode current. If laser diode current is used as feedback, the control system will try to keep it constant. The output of the Adjustable Current Source will not vary. This is called Constant Current Mode (or CC mode). If photodiode current is used as feedback, the control system will try to keep the photodiode current (and by extension – laser diode optical power) constant. The output of the Adjustable Current Source will vary to keep the optical power level the same. This is called Constant Power Mode (or CP mode). This Constant Power mode is implemented in the driver circuitry of our Laser diode circuit.

Adjustable Current Source: Current flows through the laser diode as regulated by the current source.

Ammeter: Current is measured through the laser diode or photodiode and translated into a voltage. IMON represents the current through the laser diode. PMON represents the current through the photodiode.

Summing Amplifier: These are used to measure the difference between setpoint and actual current, or to sum the onboard setpoint trimpot with an external analog modulation signal.

G(Power): This function represents how the error between setpoint and actual photodiode current is modified to make an electronic signal that appropriately drives the Adjustable Current Source to keep error to a minimum. It is used during Constant Power mode operation.

G(Current): This function represents how the error between setpoint and actual laser diode current is modified to make an electronic signal that appropriately drives the Adjustable Current Source to keep error to a minimum. It is used during Constant Current mode operation.

Modulation Input: An analog signal (e.g. a sine wave, triangle wave scan, or square wave) can be input to the laser diode driver. This voltage signal is related to the actual current or power output by a transfer function.

Onboard Setpoint Circuit: Since setpoint is application specific, it must be adjustable by the user. Typically, laser diode power supplies integrate an adjustment mechanism, such as a trimpot.

Limit Circuit: This section of the laser diode driver is key to protect the laser diode. The user sets the limit current based on the operating parameters of the laser diode (typically well below damage threshold). An Active Current Limit will shut off the laser diode current if the control system drive exceeds this current limit setting.

Safety Functions: While laser diode reliability has significantly improved over the years, a laser diode is still susceptible to damage in a variety of ways. These safety functions protect the laser diode as much as possible.

VDD: This symbol is used to refer to the external power supply that feeds the control electronics. In an instrument, this is not seen by the user. In a component or module, the user chooses how to power the control electronics. Usually this is low voltage – 3.3 to 5 V DC.

VS: This symbol is used to refer to the external power supply that feeds the Adjustable Current Source (or output stage) electronics. In an instrument, this is not seen by the user. In a component or module, the user chooses whether to tie the control electronics to the output stage or separate them so higher compliance voltage can be delivered. This is a DC voltage.

IMON: This symbol represents the laser diode current monitor voltage. Laser Diode current is related to this voltage by a transfer function given in the laser diode driver datasheet.

PMON: This symbol represents the photodiode current monitor voltage. Photodiode current is related to this voltage by a transfer function given in the laser diode driver datasheet. Photodiode current and laser diode output power are related by a transfer function given in the laser diode datasheet.

Laser Diode Current Source: One key section of a laser diode driver is the Adjustable Current Source. It can also be known as the Output Stage. This section responds to the Control System section by driving current to the laser diode. In the block diagram, the laser diode is between supply voltage and the current source. Other laser diode drivers put the laser diode between the current source and ground. Depending on the laser diode configuration and grounding, one approach may be better than the other. This is the section where the user wires the laser diode and/or photodiode into the circuit.

Control System: User inputs include the limit setpoint (in terms of maximum laser diode current allowed to the laser diode), the operating setpoint, and whether the control variable is laser diode current or photodiode current. Additionally, if a remote setpoint is required, an Analog Modulation Input is usually available.

- **Setpoint:** This is an analog voltage into the system. It can be created by a combination of onboard adjustment and the modulation input. In some cases, the modulation input sums with the onboard setting. In other cases, it subtracts from the onboard setting.
- **Error Generation:** To know how the system is functioning, the Actual current level is compared to the Setpoint current level. These two voltages are subtracted and the result is called the "Error." In the case of a laser diode driver, the actual current level can come from either the laser diode or the photodiode. If laser diode current is used as feedback, the control system will use the Error signal from the laser diode current. The output of the Adjustable Current Source will not vary. This is called Constant Current Mode. If photodiode current is used as feedback, the control system will try to keep the photodiode current (and by extension – laser diode optical power) constant. The output of the Adjustable Current Source WILL vary to keep the optical power level the same. This is called Constant Power Mode.

- **Control Function:** This converts the error signal into a control signal for the Laser Diode Current Source. It is not the same for Constant Power or Constant Current mode.
- **Limit Circuit:** One way to damage a laser diode is to drive too much current through it. Each laser diode datasheet will specify a maximum operating current. Exceeding this current will damage the laser diode. To avoid this, a limit circuit is included in the laser diode power supply. The user determines the maximum setting and the output current is kept from exceeding that level. Some limit circuits cap the current at the max level and keep operating. An Active Current Limit circuit will disable the laser diode driver current.

Generally, the LASER drivers have two functionalities - Automatic current loop and Automatic Power loop. Depending on the application, we can choose the driver circuit.

3.1 AUTOMATIC CURRENT LOOP

If the bias current has to be maintained constant, constant current loop can be implemented. This is a very simple circuit where a current regulator is used to maintain the bias current constant. The current from the Laser diode is directly taken for feedback and it is regulated. The Automatic current control loop does not take the temperature changes into considerations. The temperature control loop has to be implemented separately. This kind of driver circuit cannot be used for modulation techniques. Hence, we prefer to use the Automatic Power Loop circuits.

3.2 AUTOMATIC POWER LOOP:

The Automatic Power Loop is a servo loop which makes use of inbuilt photodiode to monitor the power from the Laser diode from its rear facet. The photodiode gives a current equivalent to the monitored power. The current from Photodiode is taken as feedback and it is passed through a servo loop to maintain the LASER power constant. Maintaining the average power constant is necessary for laser driver circuits with modulation. The temperature increase causes increase in the threshold current which will decrease the slope efficiency. Hence, the photodiode current is taken through a control loop to maintain the slope efficiency.

3.3 ANALOG LASER DRIVER CIRCUIT – AN EXAMPLE:

Figure 10 illustrates two common circuit configurations used to drive lasers for analog applications. The simpler of the two, shown in Fig.10a, offers moderate linearity and good performance in frequencies up to 500 MHz. The analog signal path only involves C1, R1, Q1, R2, and D1, the laser diode. Q1 acts as a transconductance stage in which voltage flows in and current flows out. C1 passes only the AC portion of the analog input signal. R1, usually only a few tens of Ohms, squelches any possible oscillations in Q1. The AC portion of analog input voltage VIN appears at the base of Q1 and also at the emitter of Q1. VIN, the AC voltage at the emitter of Q1, imposes across R2 to create a modulation current VIN/R2. U1 supplies DC current to the laser through R3 and R1. U1 creates a servo loop that maintains a constant photodiode current through the rear facet monitor PIN diode. The circuit illustrated in Figure 10a indirectly maintains constant laser optical output. The rear facet monitor PIN diode receives light from one end of the laser chip

while the other end of the chip illuminates the optical fiber. While the light in the fiber correlates to light in in the monitor PIN diode, it never matches exactly at all output and environmental conditions, an phenomenon called tracking error. Figure 10b. shows a more advanced analog laser circuit, offering good to excellent linearity at very high frequencies (GHz).

The signal path of this circuit only involves U2, Z1, C1, and the laser diode, D1. Amplifier U2 provides input matching, gain and isolates the laser from outside conditions. The block labeled Z1 can take on many functions. At a minimum, it interfaces the output of the amplifier U2, usually 50 or 75Ohms, to the laser that has an impedance ranging from 5 Ohms to 25 Ohms. As shown, sometimes the laser package incorporates this impedance matching.

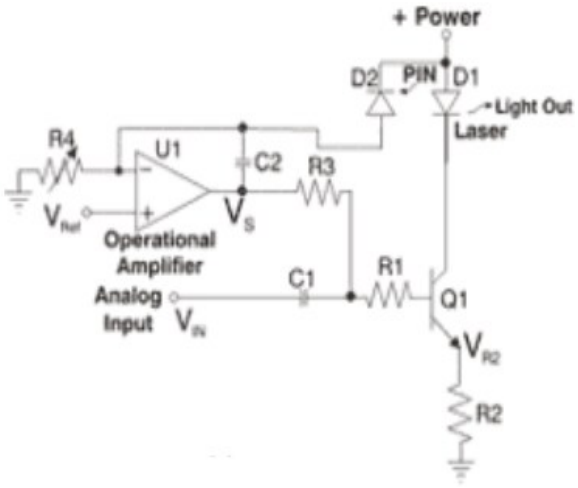

Fig.10a. Simple Laser driver circuit

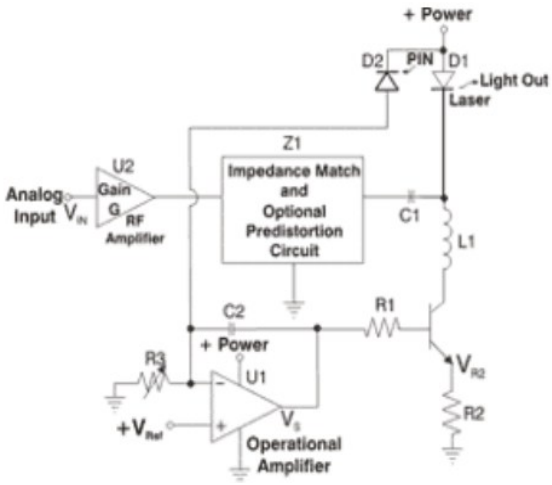

Fig.10b. Linear, High Frequency Circuit

Based on the above mentioned circuits and flowcharts, the laser driver circuit was designed and it is explained in detail in the forthcoming section.

:

4. LASER DRIVER CIRCUIT FOR PRATUSH/SARAS

The circuit diagram of the modules is as given in Fig.11

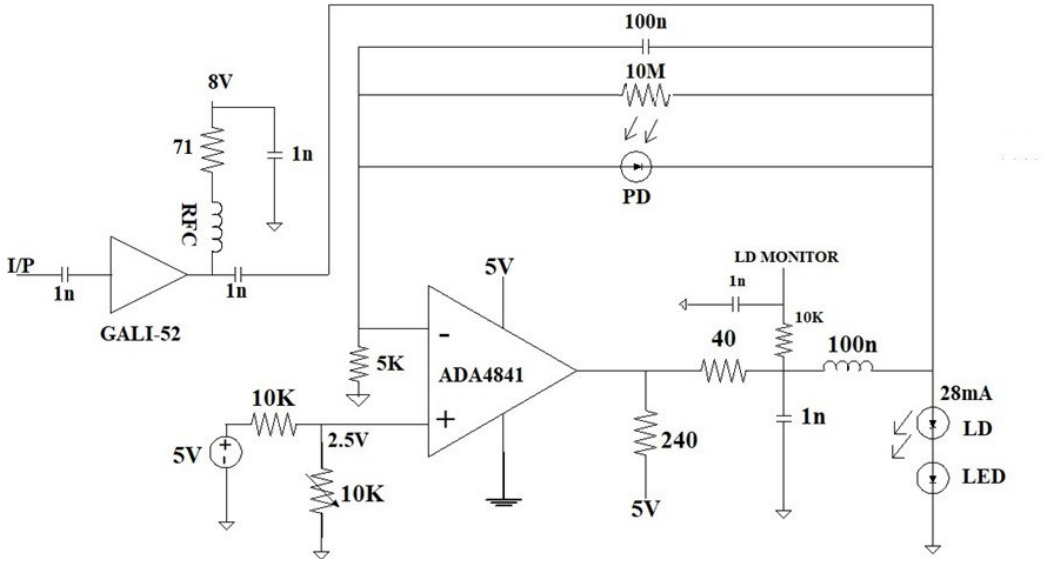

Fig.11. Circuit diagram of LD circuit with pre-amplifier

The KiCAD Schematic is given below::

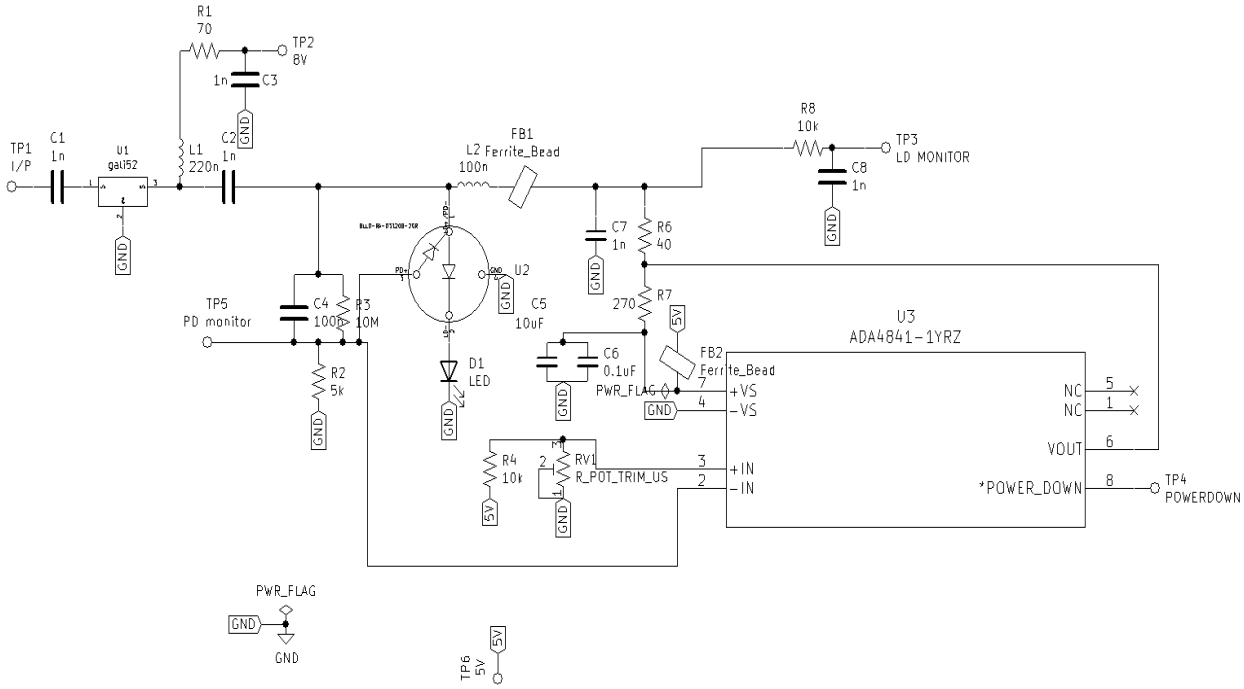

Fig.12 Schematic of the LD circuit

The Laser diode used in the circuit has the following parameters:

4.1 LASER DIODE SPECIFICATIONS:

Belycomm Laser diode BLLD-RA-D3120B-2G has been chosen as the LASER diode. A Gali-52 Amplifier precedes the Laser diode. The following are the specifications of the LD.

ABSOLUTE MAXIMUM RATINGS:

PARAMETER	VALUE
OPERATING CURRENT (LD)	I_{th} +20mA
REVERSE VOLTAGE(LD)	2V
OPERATING CURRENT(PD)	2mA
REVERSE VOLTAGE(PD)	15V

OPTICAL AND ELECTRICAL CHARACTERISTICS:

PARAMETER	VALUE
Threshold current	Min=4mA, Max=15mA
Forward Voltage	Typ = 1.2V
Optical Power	2mW
Center Wavelength	λ_c +10nm<λc<λc+20nm
Spectral Width	1nm
Monitor Current	Min=100uA Max=1000uA
SMSR	30dB
Isolation	35dB

The Laser diode is chosen to be in receptacle configuration with Type-2 pin assignment. It operates at 1310nm wavelength and the maximum power is 2mW. The Fig.10 gives the pin configuration and the receptacle configuration for FC type fiber connector. The LD is DFB type and it has an additional in-built Optical Isolator of 35dB. There is an In-built PIN diode connected in different configurations. We have chosen the configuration where LD^+ and PD^- share a common terminal.

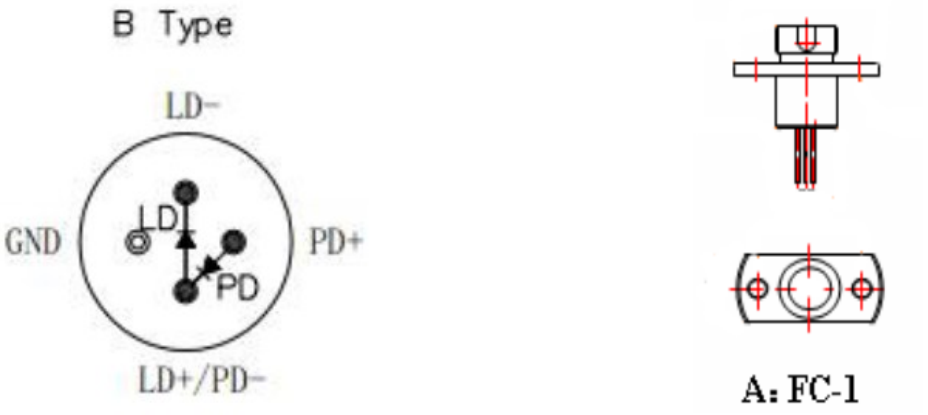

(a) (b)

Fig.13 a)LD Pin type b)Receptacle type

4.2 OP-AMP SPECIFICATIONS:

The drive current to the LD is provided by Op-amp. Hence, we have to choose an Op-amp with a drive current of at least 30mA. The RMS noise voltage less than 2nV/$\sqrt{Hz}$. Based on the requirements of driving current and the noise considerations, few Op-amps were shortlisted. Among them ADA4841-1 and MAX4125-1 were found suitable. Both are Low noise, Low distortion and Rail - to - Rail amplifiers. Both of them are in SO-8 configuration. The primary function of Op-amp is to provide a stable DC bias to the LD current. Hence, the RF signal Bandwidth is not an important parameter. Another important requirement is the single supply voltage rail. The existing Voltage outputs from the Power supply board of PRATUSH is a single 5V supply as that avoids complexity and or usage of multiple battery to provide the negative supply requirement.. Hence, the Op-amp should have single supply functionality.

PARAMETER	**ADA4841-1**	**MAX4125**
SUPPLY VOLTAGE	5V (SINGLE SUPPLY)	5V(SINGLE SUPPLY)
GAIN BANDWIDTH PRODUCT	GAIN=1 GBW=80MHz	GAIN>10 BANDWIDTH=25MHz
INPUT VOLTAGE NOISE	$2nV/(Hz)^{0.5}$	$22nV/(Hz)^{0.5}$
INPUT COMMON MODE VOLTAGE RANGE	$-0.1<V_{in}<4$	$-0.2<V_{in}<5.2$
OUTPUT SHORT CIRCUIT CURRENT	V_{in}=+Vs, 30mA	50mA

4.3 WORKING OF THE CIRCUIT:

The RF signal from the pre-amplifier is directly fed to the LASER diode. The in-built InGaAs photodiode monitors the power from the LASER and the monitor current is converted to a voltage and fed to the inverting terminal of the Operational Amplifier. Reference Voltage is connected to the non-inverting terminal. The reference voltage in turn controls the current drawn by the LD and thus the output optical power. In the feedback of the amplifier, low pass filter is added to allow only the slow varying signals to the output. Thus the feedback loop forms an AGC to maintain the LD power. The high frequency modulating signals will not enter the feedback but directly feed the Laser diode. The bias current to the laser diode is given through a 5V supply in a pull-up configuration. The bias current value can be controlled by modifying the resistance connected in series with 5V and the resistance connected to output of op-amp. The values of resistance are chosen to maintain the bias current around 30mA. There is no separate temperature control circuit but the Automatic power control inherently stabilizes the variation of the threshold current with temperature. The bias current is added with the modulation current and fed to the Laser diode. If the monitor current decreases owing to the decrease in the laser power, the servo loop increases the bias current value equivalent to the decrease and maintains the output power. A LED is connected in series with the LD to maintain the voltage at the feedback to a value greater than the

Reference voltage at non-inverting terminal. This will ensure that the PD remains reverse biased. This also sets a limit on the reference voltage range. Based on the datasheet of the Laser diode, the monitor current from PD can have a maximum of 1mA and a minimum of 0.1mA for power varying between minimum and maximum of 2mW. The LD operates at a maximum optical power of 2mW. The monitor current for max power is typically around 0.5mA. This will then contribute to a 2.5V at inverting terminal. When the non-inverting terminal is also kept at same reference voltage, the Op-amp will drive a high current which will get added with the RF current at the LD terminal. Suppose, the power of LD falls from its maximum, the PD current will reduce which will subsequently reduce the inverting terminal voltage. So, the Op-amp will drive more current to increase the LD optical power such that the inverting voltage equals that of non-inverting voltage. In this manner, the constant Optical Power is maintained and this method of drive control is Automatic Power Control. The components used in the circuit are as listed below:

COMPONENT LIST:

COMPONENT	QTY
BELYCOM LASER DIODE	1
OP-AMP ADA4841-1	1
GALI-52	1
LED	1
POT 10K BOURNS 3296W	1
10K RESISTOR	2
5K RESISTOR	1
70 OHM RESISTOR	1
40 OHM	1
270 OHM	1
10 OHM	1
10M OHM	1
250 OHM	1
100nH Inductor	1
220nH Inductor	1
100nF Capacitor	1
1nF	5
0.1uF	1
10uF	1

EXPERIMENTAL SETUP: The Fig.14 shows the Fabricated LD circuit on a base plate. A RF input of 100MHz, -50dBm was given from a signal generator. The output is connected to an Optical Receiver through OF cable. The receiver used for testing is presently a COTS MITEQ receiver unit and we plan to develop in-house cost effective optical receiver unit with discrete components. The receiver output is then connected to a Spectrum Analyzer and measured. The Transmitter and Receiver modules are connected by 2m OF cable with FC type connectors on both ends. The MITEQ receiver E2000 connector is converted to FC type through an adapter and it is connected to the cable. Apart from measuring the spectrum, the S-parameters of the module were also measured using VNA. The VNA port 1 was connected to the Input and port 2 was connected to the Output from MITEQ.

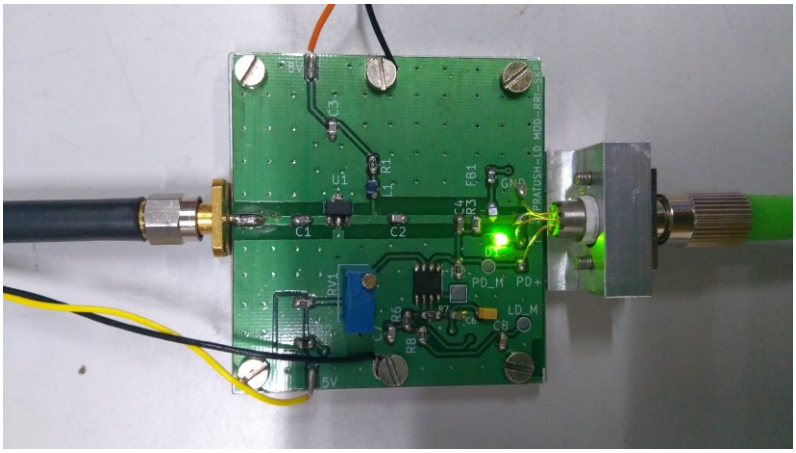

Fig.14. Fabricated LD circuit

4.4 PRELIMINARY CHARACTERIZATION OF THE CIRCUIT:

Initially, the variation of the Optical power with LD current was characterized and the results re plotted in Fig.15. The threshold current of LD module as shown in specs earlier is 4mA. It can be seen that LD starts emitting above 3mA and the power comes to around 1mW at 15mA. The maximum power of 2mW is achieved around 28mA. The Fig.16 depicts the variation in the reference voltage and the corresponding drive current variation. Since the optical power increases after 15mA, we can have any reference voltage above 1.5V. After the electrical characterization of the LD module, the RF system characterization was also carried out. The S-parameters were measured first using VNA. This is depicted in Fig.17. It can be understood that the S_{11} of the transmitter is around just -5dB.This mismatch is due to the mismatch in impedance of Forward biased LD and the 50Ω RF amplifier. Here an additional 3dB attenuator was added to improve the matching. The improved return loss parameters can be seen from Fig.18. The isolation provided by the module and the Optic Fiber is greater than 50dB. The gain of the entire link is around 15dB. The noise figure of the link was also measured and it is around 15dB. We have an improvement in the noise figure with the presently used COTS module by 5dB. The RF power output from receiver measured using Spectrum Analyzer is given in Fig.20.It can be seen that the power remains constant even when the drive current is reduced which is evident that the control loop is acting to stabilize the laser bias.. The Compression point was measured using Spectrum Analyser and cross verified using Network Analyser. In Fig.21, it can be seen that the Gain reduces by 1dB for an input power of -10dBm. The third order products were also measured by varying input power till compression point and on extrapolation of the gain curves and the IP3 curve, the IIP3 was found to be around 16dBm of input power. Thus all the RF system parameters were measured and the LD module performance seems to satisfy the requirement and can be used in the system replacing the COTS module.

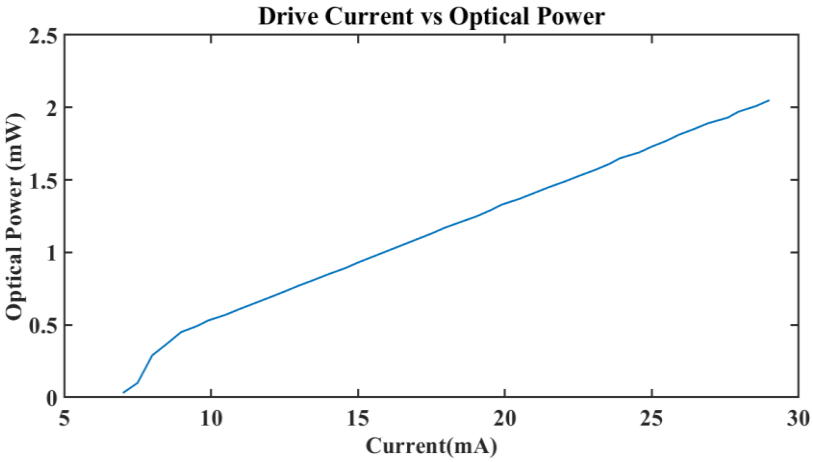

Fig.15 LD current vs the Optical Power

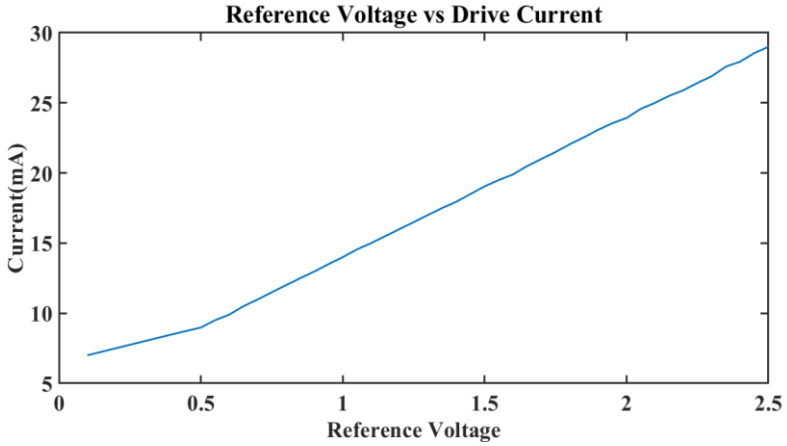

Fig.16 Reference Voltage vs LD current

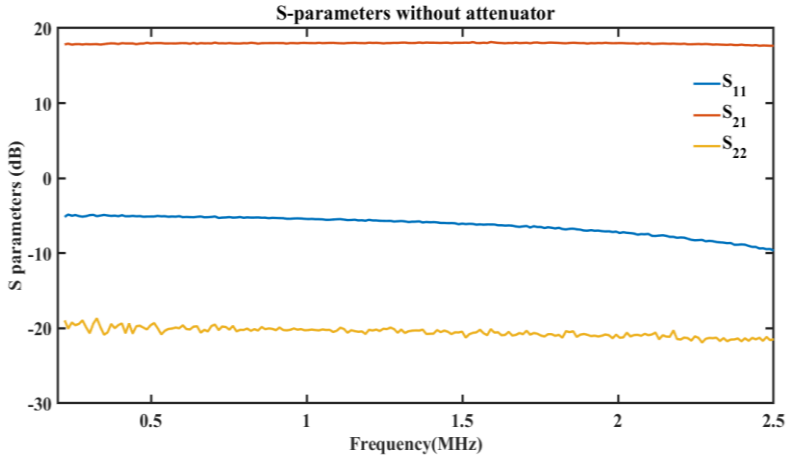

Fig.17. S-parameters without attenuator

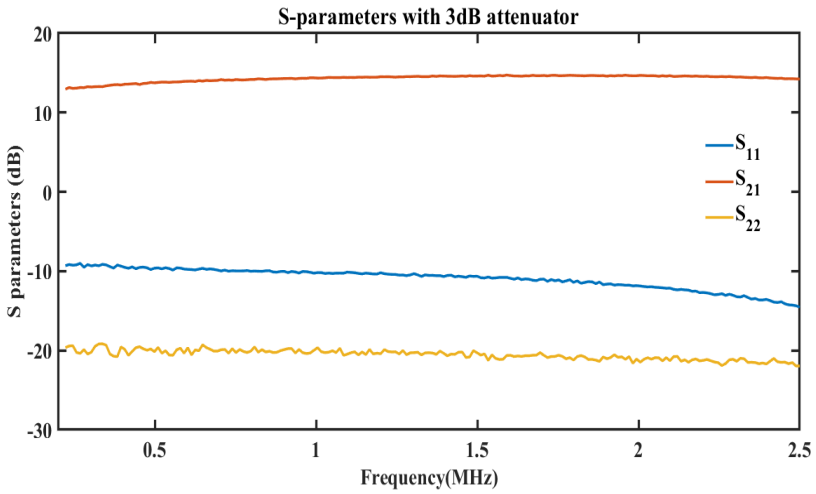

Fig.18 S-parameter of the LD circuit with attenuator

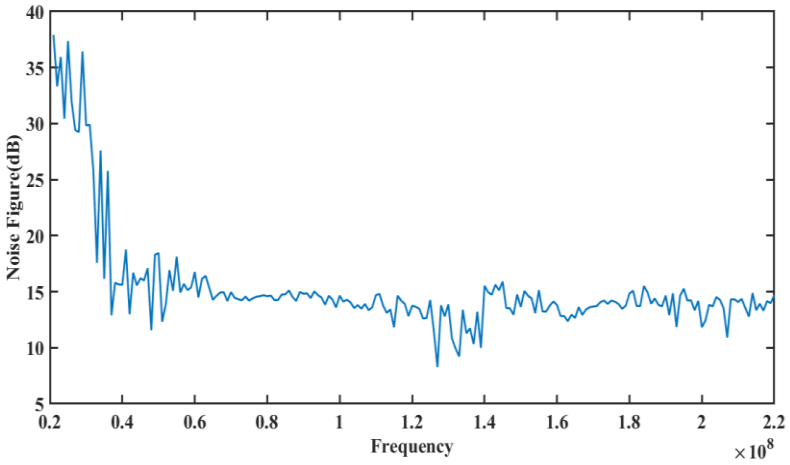

Fig.19 Noise Figure with attenuator

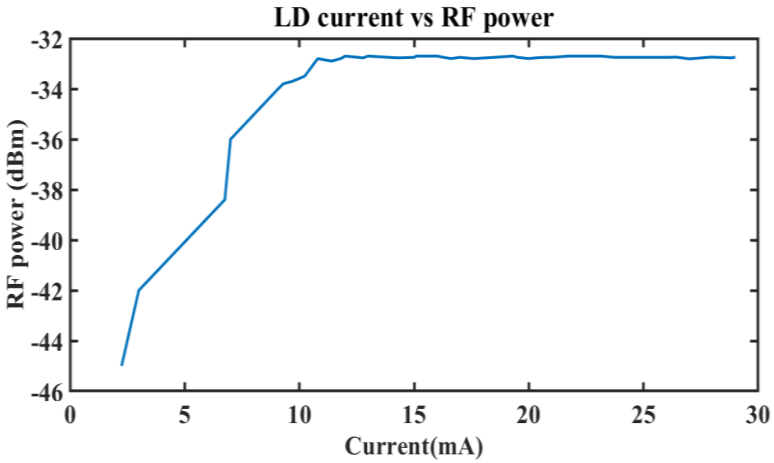

Fig.20.Current vs RF power at receiver

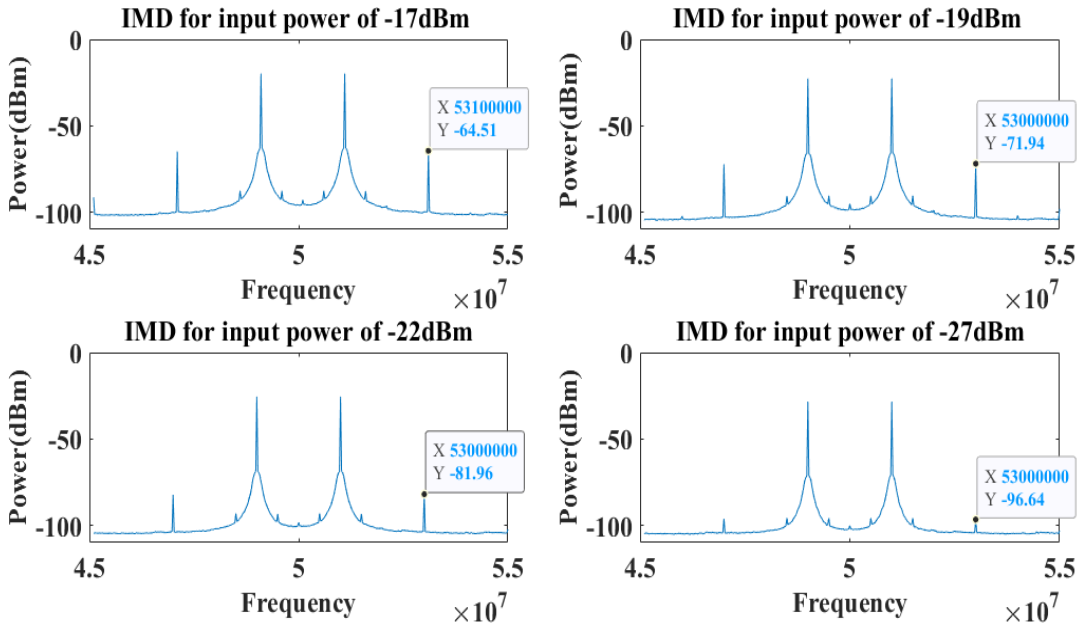

Fig.21. Third order Intermodulation Measurement at different Input powers

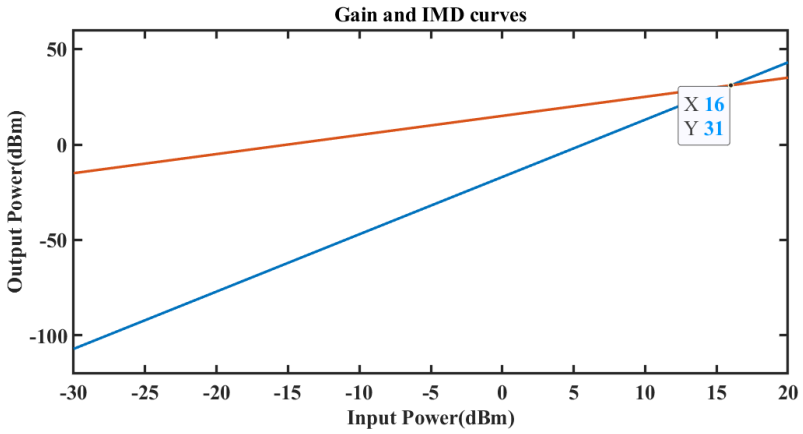

Fig.22 IIP3 and Gain curves

Thus the LD module has been characterized in terms of the circuit parameters as well as the system parameters. A comprehensive list of the parameters is summarized below:

NO.	PARAMETER	VALUE
1	**THRESHOLD CURRENT**	6mA
2	**OPTICAL POWER**	2mW at I=28mA 1mW at I=15mA
3	**REFERENCE VOLTAGE**	2.5V for P_{opt}=2mW 1V for P_{opt}=1mW
4	**PHOTODIODE MONITOR CURRENT**	0.5mA for 2mW
5	**ISOLATION**	>50dB
6	**INPUT RETURN LOSS**	10dB (20 – 250MHz)
7	**GAIN**	22dB without receiver and Attenuator 18dB with receiver and without attenuator around 15dB with receiver and with attenuator
8	**LINK LOSS**	4dB (OF cable and the MITEQ receiver loss)
9	**NOISE FIGURE**	15dB
10	**COMPRESSION POINT**	Input referred: -10dBm
11	**IIP3**	Input referred: 16dBm

FUTURE WORK:

The stability analysis of the LD module has to be carried out by integrating the module with the entire receiver system. The entire receiver system will be then characterized indoors for the temperature stability, mechanical stability and the spectral purity. The receiver module will be replaced by an indigenously designed circuit instead of the COTS module to mitigate the possible sources of anomalies.

CONCLUSION:

Based on the preliminary tests conducted on the module we can conclude that the module has the potential to replace the COTS modules in the receiver system and it can be now taken to next levels of testing. The Optical RFoF Tx circuit operating with linear power supply, with better noise figure and having a good compression and IIP3 values, with the control loop included seems to be a way forward for replacing the COTS unit. Thus, the circuit proves to be a potential candidate for isolation between the Front end and the receiver modules.