Measuring a Quantum Measure Exceeding Unity

Sanchari Chakraborti[1], Rafael D. Sorkin[2,3,5], and Urbasi Sinha[1,4]

[1]Raman Research Institute, C.V.Raman Avenue, Sadashivanagar, Bengaluru-560080, Karnataka, India
[2]Perimeter Institute for Theoretical Physics, Waterloo, ON N2L 2Y5, Canada
[3]Department of Physics, Syracuse University, Syracuse, NY 13244-1130, U.S.A.
[4]Department of Physics and Astronomy, University of Calgary, Alberta T2N 1N4, Canada
[5]School of Theoretical Physics, Dublin Institute for Advanced Studies, 10 Burlington Road, Dublin 4, Ireland

arXiv:2407.15702v3 [quant-ph] 14 Sep 2026

The history based formalism known as Quantum Measure Theory (QMT) generalizes the concept of probability-measure so as to incorporate quantum interference. The resulting *quantum measure* μ is defined for arbitrary events (sets of histories), not just for observables at a fixed moment of time. Thanks to interference effects, μ can exceed unity, exhibiting its non-classical nature in a particularly striking manner. Here, in an optical experiment, we illustrate an ancilla based filtering scheme that gives operational meaning to the quantum measure. For a specific photonic event E, we report a measured value of $\mu(E) = 1.172^{+0.013}_{-0.019}$, which within errors agrees with the theoretical value of $5/4$, while exceeding the maximum value permissible for a classical probability (namely 1) by 13.32 upper or 8.89 lower percentile widths. The directly observed quantity is an ordinary detector probability $p_D \leq 1$ (or, with laser light, an equivalent power ratio); the value $\mu(E) > 1$ is inferred via the calibrated relation $\mu(E) = 2p_D$ for our filter.

If an unconventional theoretical concept is to play a role in meeting the foundational challenges of quantum theory, it seems important to bring it into contact with experiment as much as possible. Our experiment does this for the quantum measure.

1 Introduction

What exactly are we measuring when we perform a quantum measurement? What, beyond the fact that a certain detector has clicked or the trace on a certain oscilloscope has shown some specific behavior, does the measurement teach us about events in the physical world? A full answer to this question would go a long way toward resolving the foundational puzzles raised by quantum theory because it would clarify the relationship that formal mathematical objects like wave functions and complex amplitudes bear to physical objects and events in the microscopic realm.

Consider for example an optical experiment involving an apparatus consisting of a laser together with components such as mirrors, beam splitters, polarization optics, and photo detectors mounted on an optical bench. Imagine now that a photon emerges from the laser and makes its way through the various optical elements to a detector which accordingly "clicks", and in the process destroys the photon, thereby bringing the experiment to an end. What does the "click" of this detector reveal to us about the micro-world?

Thanks to some combination of convention, habit, and prior experience, we feel comfortable in saying that an observed "click" signifies the arrival of the photon. One might question how this implied transformation of photon to observed click actually takes place (the so-called measurement problem); but even if we refrain from asking about this, a still more glaring explanatory gap remains. The final click tells us nothing definite about the photon's career after it left the laser and before it arrived at the detector. It fails to answer the question, *What, exactly, happened in between the initial emission and the final detection*?

But if you believe (as almost any working

Urbasi Sinha: usinha@rri.res.in

physicist will) that something really did happen in-between, then the paradigm of preparation − evolution − observation leaves much to be desired (not least because if we are honest, we have to admit that we live our whole lives in this in-between condition). All the more interesting, therefore, are measurement procedures that aim to shed light on entire physical processes and not just certain types of correlation between an "input" and an "output" (or between a "preparation" and a "detection") − procedures that concern themselves with temporally extended *events* rather than just momentary *states*.

In this work, we realize an optical event filter. From the standpoint of standard quantum optics, our apparatus implements a generalized measurement (a positive operator-valued measure, POVM) on the enlarged system that includes the photon's polarization as an ancilla. Accordingly, the raw experimental observable is an ordinary detector probability (or, with laser light, a power ratio) that is necessarily ≤ 1. Here, the quantum measure $\mu(E)$ is a non-negative weight assigned to an event E (a set of histories) that incorporates interference between histories and, unlike an ordinary probability, can exceed unity. The novelty is not new dynamics, but engineering the measurement so that this probability equals a fixed fraction of the quantum measure of a chosen *system event* E in the underlying histories description. Strictly speaking, no ordinary probability exceeds unity here; what exceeds unity is the quantum measure $\mu(E)$ inferred from the detector probability via the event-filter mapping.

The experiment reported in the present paper implements a procedure of this sort. It builds what we will call an *event filter* that *selects for a particular set E of trajectories*, in close analogy to how a polaroid filter selects for a particular polarization-state. Our experiment realizes in the laboratory (and for a particular event) a version of the general scheme described in [1]. (Although it is inspired by [1], there are some important differences, which will be noted in the sequel.) The thing to be emphasized is that what an event-filter measures cannot be described by a system-observable that pertains to a single time: it "filters for" an event rather than a momentary state.

By way of comparison with our experiment, one can mention two other examples of event-oriented measurement schemes that address the question of "What, exactly, happened in between", namely "negative result measurements" [2, 3] and "weak measurements" [4].

For an example of the former type of measurement, consider a photon which is directed toward a polarizing beam splitter that transmits H polarization and reflects V. If one then places a detector behind the beam splitter in the transmitted direction, and if this detector *does not click*, then (for an ideal scenario without absorption) one can conclude from this negative result that the photon was reflected with V polarization. In such a measurement, the photon (in favorable runs) is not destroyed, and hence one has acquired "in-between" information on an ongoing physical process while allowing the process itself to continue. (We'll meet this technique again in Section 6, where we discuss an enhancement of our experimental design that could be implemented in a future iteration of our experiment.)

Weak measurements are also very relevant to our discussion, in view of their intimate connection to path-integral formulations of quantum mechanics. The output of a weak measurement [5], is a complex number of the form $\frac{\langle f|\,\hat{O}\,|i\rangle}{\langle f|i\rangle}$, where $|i\rangle$ is the "pre-selected state" and $|f\rangle$ is the "post-selected state", the complex number itself being known as the weak value $\left\langle \hat{O} \right\rangle_w$ of the operator $\hat{O}$ under the given experimental conditions. This number, long known to quantum field theorists as an *in-out expectation value*, is a transition amplitude of the sort that is ubiquitous in calculations of S-matrix elements; and it is directly reducible to a path integral.[1] Moreover this connection to path integrals (see also [6]), is no accident, we think, because *histories-based* frameworks are the only ones known to us that take as their starting

[1] When one thinks of $\left\langle \hat{O} \right\rangle_w$ as a transition amplitude (more correctly a ratio of them) rather than an expectation value, one feels no astonishment that it fails in general to be a real number.

point physical processes in their entirety, rather than momentary states evolving temporally via the Schrödinger equation. As such they offer the only framework within which questions about "what happened in between" find a natural home.

In subsequent sections we will describe more fully our experiment and its conceptual context, which is that of the histories-based framework known as Quantum Measure Theory (QMT). As a further development of path-integral formulations, QMT offers quantum mechanics a formalism not founded on concepts like wave function, superposition of states, or operators as observables [7]. Instead it describes the kinematics (the "ontology") of a physical system in terms of its *histories* (e.g. a particle trajectory) and its *events*, an event being a set of histories. In line with mathematical formulations of the theory of stochastic processes (from which the terminology "event" is also taken), QMT describes the dynamics of the system in terms of a *quantum measure* that assigns to every event E a generalized probability $\mu(E)$ (which, though non-negative, can exceed unity).[2]

One of the simplest imaginable quantum systems is the "two-site hopper" studied within the framework of quantum measure theory by reference [14]. Our experiment realizes such a hopper as a photonic system, and employs an ancilla-based filtering scheme (an event filter) in order to determine the quantum measure $\mu(E)$ of a specified hopper event E. The experiment addresses a question which, posed in a classical setting, would ask "Which path did the photon follow in going from source to detector?" Pinning the photon down to a unique path, however, is not a very enlightening exercise in a quantum context. It is trivially accomplished by inserting detectors in suitable locations, but in doing so, one suppresses the interference between distinct paths which is the hallmark of quantum processes. Instead, we will select a *set* of paths —- an event — and ask the question, "Did this event happen?". An apparatus that implements this question in an appropriate sense is what we are calling an event-filter.

As already mentioned, the specific event filter used in our experiment contains some novel features with respect to the class of protocols set out in [1]. Firstly (as discussed in detail in Section 4) we employ the photon's polarization degree of freedom as our ancilla; and secondly (since no additional ancilla is available) we are led by necessity to *reuse* ours by in effect coupling it a second time to the system. The use of the photon's polarization as ancilla (rather than some totally separate "qubit") is merely an artifice that allows us the convenience of employing polarizing beam-splitters to couple the ancilla to the photon's trajectory. But the technique of coupling the same ancilla to the system more than once offers an improvement over [1] that could be important in application to more complicated events containing large numbers of histories. (In this simple case, it raises the counting efficiency from 1/3 to 1/2.)

The fact that our event-filter yields correctly the theoretically computed value of $\mu(E)$ is strong evidence that it is functioning correctly. In our present design, though, the photon gets destroyed by a detector placed at the desired output port, thereby bringing the experiment to an abrupt end. In that sense, our design falls short of what one would expect from a true filter, which would pass the photon through without destroying it. Enhancing our design to achieve this behaviour would not be very difficult, however. As described in Section 6, a simple negative-result modification of our apparatus would render the filter non-destructive, allowing the experiment to continue. Subsequent testing employing further optical elements could then verify that the filter had truly selected for the intended trajectories.

In connection with quantum computing, a fully non-destructive event-filter would also

[2] In the framework known as Decoherent Histories or Consistent Histories [8, 9, 10, 11, 12, 13] the same event E would also receive a measure $\mu(E)$ exceeding unity. In fact the computation would be exactly the same as here. The difference however is that in that framework $\mu(E)$ is regarded as meaningful only for events E which decohere from their complements, i.e. events for which the measure of E and the measure of its complementary event sum to 1 (which of course is impossible when $\mu(E) > 1$). In contrast QMT treats every event as meaningful in principle, and our experiment supports this attitude by illustrating how the measure of an arbitrary event can acquire an operational meaning.

have potential applications that are not hard to imagine.

In the remainder of this paper, we first provide some background that is helpful to appreciate more fully the significance of our experiment, and then we describe the experiment itself, its results, and some of its implications as we see them. The background and an overview of the history-based framework of QMT are presented in section 2, followed in section 3 by a simplified version of our experiment intended to illustrate the main ideas behind it. The experimental details and the results are described in Sections 4 and 5, with sections 6 and 7 presenting final comments, interpretations, and proposals for further experiments that would enhance or extend the one we have performed.

2 Overview: Conventional Quantum Theory to Quantum Measure Theory

In what one might refer to as the standard quantum formalism, a microsystem is described by a wave function ψ that resides within a Hilbert space, and the dynamics of the system is governed by a Schrödinger equation that generates unitary time-evolution of ψ under a particular Hamiltonian. A property of the system manifests itself in the outcome of a measurement of an observable $\hat{O}$. The probability distribution over different possible outcomes can be obtained from ψ and $\hat{O}$ by using the Born rule [15]. Although the predictions made by this formalism have always been found to be consistent with experiments, the theory appears to be inadequate as it fails to comment on the reality of the micro-system at intermediate times between preparation and observation. Nor does it address the question of what exactly takes place during the measurements (or preparations) themselves [3]. These two lacunae lie at the core of the so-called quantum measurement problem, and have given rise to continuing debates over whether one can assign an ontological meaning to ψ [17], and how to conceive of what (if anything) happens between preparation and measurement.

Amidst all these debates and attempts to provide a complete description of the quantum system and its behaviors, one finds oneself continually returning to the fact that the conventional interpretation, with its emphasis on the measurement-process, presupposes an a priori division of the universe into an observer (classical system) and an observed (quantum system); but it does so without providing any coherent account of this "Heisenberg's cut" [18, 19]. This has led many people to feel the need for a more unified conception that could encompass both the micro and macro worlds within a single framework.

In this quest, one can observe a contrast between approaches that have inherited the pre-relativistic notion of momentary states evolving in time, and approaches that adopt a more global, spacetime point of view from the very beginning. An approach of the former type will typically conceive of ψ as a function defined on configuration-space and evolving continuously over time. In contrast, manifestly covariant descriptions are more natural to gravitational physics, as well as to high energy processes and quantum field theory in Minkowski spacetime. For these reasons, it has been argued that the Dirac-Feynman path integral [20], or more generally a sum-over-histories approach towards quantum dynamics like that in [21], is more appropriate in adapting quantum mechanics to special relativity, and especially to general relativity [22]. [4]

Moreover, a formalism that, like Quantum Measure Theory (QMT) [25, 26], could dispense at a fundamental level with concepts like wave function, observable, and state-vector reduction,

[3] A 1962 talk by Wendell Furry [16] offers an exceptionally clear account of this second aspect. We limit ourselves to quoting just the following extract. "The important thing is, the statement is simply: *when you measure, this is what you get.* There is *no statement made* as to what happens in the actual measuring process. ... This is what various people ... call the cut. It is where something happens which the theory does not describe mathematically."

[4] This allies with the philosophy of "gravitizing quantum mechanics" [23], i.e. modifying it to fit better with general relativity, as opposed to only "quantizing gravity", i.e. modifying general relativity to fit better with existing formulations of quantum mechanics and quantum field theory [24].

would be better suited to cosmology and the study of the early universe [27]. This is because on the one hand, quantum effects cannot be neglected in the early universe, while on the other hand, and unlike in a laboratory setting, nothing in the physics of that epoch obviously corresponds to the concepts of observer or state preparation and measurement.

2.1 Quantum Measure Theory: A Histories-based Formulation

Quantum Measure Theory (QMT) offers a spacetime formulation of quantum mechanics based on a path-integral or sum-over-histories approach. It interprets the behavior of a quantum system from the perspective of a suitably generalized theory of stochastic processes [7]. The kinematics or "ontology" of such a theory rests on the concepts of *history* and *event*; and the dynamics is a kind of quantum-stochastic law of motion for the history [21], given mathematically by a *quantum measure* which generalizes the classical notion of a probability-measure so as to incorporate quantum interference.

A *history* in this framework is taken to be the fundamental building block of reality; it gives the finest grained description conceivable in the theory of the system in question. If, for example, the system in question were a single particle, a history would be a single worldline; if it were a field, a history would be any of its conceivable spacetime configurations, etc. In general, the definition of history depends on the system one is dealing with and the model or context adopted to describe it. An *event* is then identified with a set of histories of the system, and it is mapped to a non-negative real number, called its *quantum measure*, that generalizes the classical notion of the probability of a random event.[5] Formulated in this manner, a quantum theory is more akin to a classical theory of stochastic processes like Brownian motion than it is to classical Hamiltonian dynamics.

[5]Notice that when one speaks of "the event E" one does not imply that E really happens, only that it might or might not happen in any particular case. For this reason David Reid has suggested the alternative term "occurable" instead of "event". However, for now we stick with the usage that has become standard in probability theory.

In quantum measure theory, the kinematics and dynamics of a given system are defined mathematically by a triple $(\Omega, \mathcal{A}, \mu)$; where Ω (the history space) is the space of all conceivable histories, $\mathcal{A}$ (the event algebra) is the set of all subsets of Ω to which a measure can be assigned (including the empty set $\emptyset$ and Ω itself), and μ (the quantum measure) is a function that maps each element of event algebra to a positive real number ($\mu : \mathcal{A} \to \mathbb{R}^+$). Unlike a classical probability, a quantum measure incorporates quantum interference, and hence, its values cannot (except in important special cases) be interpreted as probabilities in the usual sense. They neither obey the probability sum rule nor (because of constructive interference) are they bounded above by unity.

The quantum measure μ can be characterized abstractly by certain positivity conditions and axioms that generalize the Kolmogorov sum rule for probabilities. For a large class of theories μ takes the form of a "double path integral" designed in such a way that when E is what we will term an "instrument event", $\mu(E)$ will be equal to the Born-rule probability of the instrument "reading" corresponding to E. For the type of unitary system that figures in our experiment, where a history corresponds to a particle-trajectory γ restricted to a definite interval of time, and for an event $E = \{\gamma^1, \gamma^2, ...\}$ comprising a finite number of histories, $\mu(E)$ is given by the formula,

$$\mu(E) = \sum_{\gamma^i, \gamma^j \in E} A(\gamma^i) A^*(\gamma^j) \delta_{\gamma^i_{end}, \gamma^j_{end}} \qquad (1)$$

Here, $A(\gamma)$ is (as illustrated below) the quantum amplitude associated with the history γ, and the delta-function $\delta_{\gamma^i_{end}, \gamma^j_{end}}$ limits the interference between histories to those that terminate at the same point. Because of how the measure of an instrument event relates to the Born rule, the measure μ for a given system encodes in particular all the predictions about that system made by the ordinary quantum formalism.

2.2 Different types of Events and their Measures

Events, as defined in QMT, can be broadly classified into two categories, instrument events and non-instrument events (one might also name

the latter as "system events").

Instrument events concern the histories of an instrument; by instrument here we mean a piece of measuring apparatus, and the intended histories are those of the variables that describe the instrument's macroscopic behaviour, in practice the variables that express the "output" of the measurement. For example, a particle detector (in our experiment, a photodetector) could have the history space, $\Omega_I \equiv \{\checkmark, \times\}$; where $\checkmark$ and $\times$ are the two histories of the detector corresponding respectively to the two classically admissible outputs, 'click' and 'not-click'. In this case, the event algebra contains four instrument events $\mathcal{A}_I = \{\emptyset, \{\checkmark\}, \{\times\}, \{\checkmark, \times\}\}$, with the measures of the first and last events being 0 and 1, respectively. The measure $\mu_\checkmark$ of the event $\{\checkmark\}$ gives the probability of detection, and we have $\mu_\checkmark + \mu_\times = 1$, provided that the detector functions perfectly.

Non-instrument events, on the other hand, are events that do not involve any instrument (specifically any detector). For example, the photonic events associated with a photon encountering a lossless optical beam splitter are such events, and the history space corresponding to this episode in the photon's career can be taken to be $\Omega_{NI} \equiv \{\mathcal{T}, \mathcal{R}\}$, where $\mathcal{T}$ and $\mathcal{R}$ are the trajectories of the photon undergoing transmission or reflection through the BS, respectively. Non-instrument events can be made more and more complex by introducing more devices with multiple output ports in the path of the system.

The classification into instrument and system events is not intended to be either precise or exhaustive. For one thing, microscopic events happen within instruments as well as outside them, but such events are of secondary interest as long as the functioning of the instrument can be taken for granted, being deemed not to be in need of a detailed analysis.

Although system events are not directly observed, they can often be inferred from suitable instrument events. Whether a photon was transmitted or reflected from an optical beam splitter remains unknown to us until a detector registers the photon either in the transmitting port or in the reflecting port of the beam splitter. It's well to recall, however, that this kind of deduction is only justified to the extent that the detector has high efficiency, because a dark count in the detector can falsely imply the presence of the photon. Deducing the occurrence of a non-instrument event from an instrument event relies on the assumption that there exists a perfect correlation between the two classes of events, an assumption that needs to be substantiated either by calibrating the instrument empirically, or by analyzing its functioning theoretically when this is possible.

A further distinction between two different categories of system events is important in connection with our experimental protocol. This is the distinction between *serial* events and *non-serial* events. Serial events include all those that could in principle be directly identified from a *sequence* of momentary instrument events, without the need for any quantum ancilla. More abstractly a serial event is one that corresponds mathematically with a sequence of projection operators, and thereby with a corresponding sequence of projective ideal measurements.[6]

In contrast, a non-serial event E is one whose occurrence cannot be revealed in this simple manner. Detection of such an event seems to require the use of quantum ancillas which can gather information about the system's history (for us the path of the photon), in a more controlled manner. Ideally, they would gather no information beyond the bare amount needed to affirm that "The event E has happened", but when this is impractical, the ancillas can be made to interact with each other subsequently, so as to forget whatever superfluous information they might have retained. For example, the universal scheme of [1] functions this way.[7] From this perspective, the event-filter of our experiment can be understood as using a single ancilla that couples twice to the system.

Operationally, this distinction matters because

[6] It follows in particular that the quantum measure of such an event can never exceed unity.

[7] This suggests a notion of complexity for system-events such that one event is more complex than another if a filter for it requires more ancillas or requires an ancilla to couple more times to the system.

in an ordinary interferometer a detection at a single output port corresponds to a *serial* (instrument) event, whose measure reduces to an ordinary probability and therefore cannot exceed unity. What the event-filter adds is a controlled use of an ancilla to *convert* a chosen non-serial *system* event E into a single detector event D, so that the detector probability $P(D) \leq 1$ encodes $\mu(E)$ up to a known, device-determined factor.

A practical example might help to clarify the distinction between serial and non-serial events.

Consider a particle passing through two double slit diaphragms, one placed after the other, separated by a finite gap. Let A_1, B_1 represent the upper and lower slits in the first diaphragm, and A_2, B_2 represent the same in the second diaphragm. The events, $E_1 = \{A_1A_2, B_1A_2\}$ and $E_2 = \{A_1A_2, A_1B_2\}$, are then to be considered as serial events, as they can be detected simply by a placing an instrument (say a detecting screen) after the second diaphragm, while blocking the slit B_2 (for E_1) or B_1 (for E_2). In words, E_1 is the event that the photon traverses "either of the two slits in the first diaphragm *and then* the upper slit in the second diaphragm", and similarly for E_2. Even more simply the event $E_3 = \{A_1B_2\}$ is also a serial event, because it answers to the phrase "upper slit in the first diaphragm *and then* lower slit in the second diaphragm". On the other hand the events, $E_4 = \{A_1A_2, B_1B_2\}$ and $E_5 = \{A_1B_2, B_1A_2\}$, are not serial events, as they cannot be detected by masking any subset of the slits and then asking whether or not the photon has arrived at the final screen.

Serial events clearly form a very special category within the full event algebra of a system. The possibility to design event filters corresponding to system events which are not serial opens up therefore a much greater range of possible measurements than is ordinarily contemplated. By dealing with all kinds of events, including non-serial events, quantum measure theory goes beyond ordinary QM in the direction where a better understanding of relativistic quantum field theory, and beyond that of quantum gravity, appear to lie.

Roadmap and notation. To separate conceptual aspects from experimental details, we first present a pedagogical example that illustrates how a quantum measure is computed for a chosen (non-serial) event. The specific event used in this pedagogical section, denoted E_{demo}, is selected only for clarity and is *not* the event implemented in our experiment. The experimental realization is described in Section 4, where the event of interest is $E_{\text{exp}} = \{00, 01, 11\}$. To avoid confusion, we will explicitly distinguish E_{demo} discussed in section 3 from E_{exp} (discussed in Sections 4 and 5).

3 A simplified experiment that illustrates the main ideas

Pedagogical example (not the experimental event). In this section, we consider a simplified illustrative event E_{demo} to explain the basic definitions and the structure of the interference terms in the quantum measure. This example is intended purely as a conceptual guide; the experimentally implemented event and its corresponding event-filter are introduced later in Section 4. All expressions derived here are general and apply to any event once the corresponding histories (and intensities/phases) are specified.

Let us consider a simplified design intended to bring out the main ideas behind the experiment. In doing so, it is important to distinguish mentally the pure "System" itself, and events therein, from the larger experimental setup that includes as well those additional optical elements that help to separate out the System-event E_{demo} for which the filter has been designed, and whose measure $\mu_{\text{demo}}(E_{\text{demo}})$ we wish to measure.[8] Correspondingly two different quantum measures come into consideration, one for the System per se, and one for the full experimental setup including all the components of our event-filter. In this section we will use the symbol μ_{demo} for the former and $\mu_{F,\text{demo}}$ for the latter.

[8] We intend these "additional elements" to include the photon's polarization, which one is separating conceptually from its trajectory or "worldline".

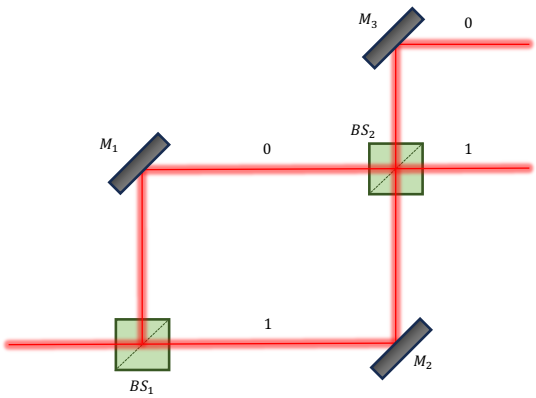

Figure 1: Schematic of the photonic *system* (not the event-filter): a photon propagates through beam splitters BS_1 and BS_2 and mirrors M_1–M_3, defining the four two-step histories $\Omega = \{00, 01, 10, 11\}$ (with 0/1 denoting the upper/lower output mode after each beam splitter) used in the pedagogical discussion of Section 3. The experimental event-filter is introduced in Section 4.

Our *system* is depicted schematically in Figure 1. It comprises a photon (more correctly, only its position), together with a set of mirrors and beam-splitters arranged in the form of a Mach-Zehnder Interferometer. For simplicity we limit ourselves to two beam splitters, although one could continue the pattern indefinitely. If we exclude the optical elements from our history-space, as we may do since they remain the same from history to history, then a system-history is determined by which of the two output ports the photon follows in each beam-splitter. The upper or lower path taken by the photon after each beam splitter will be labelled as 0 or 1 respectively. Thus, the history space for this System can be idealized as $\Omega = \{00, 01, 10, 11\}$.

The quantum amplitudes associated with passage through a 50:50 beam splitter can always be taken to be $1/\sqrt{2}$ for transmission and $i/\sqrt{2}$ for reflection. The net amplitudes for the four histories in Ω will then be $A(00) = -1/2$, $A(01) = i/2$, $A(10) = +1/2$, $A(11) = +i/2$, where we have ignored propagation amplitudes that are common to all the paths.

In order to illustrate how the quantum measure is defined, we can consider three possible System-events in this pedagogical setting, the first of which is just the singleton-event $E^{(1)}_{\text{demo}} = \{00\}$. For this event, equation (1) yields simply $\mu_{\text{demo}}\left(E^{(1)}_{\text{demo}}\right) = |A(00)|^2 = 1/4$, which is recognizable as the probability for the photon to activate a detector located after mirror M_3.

Our second event will be $E^{(2)}_{\text{demo}} = \{00, 10\}$. Since both of these paths end at the same point, the δ factor in (1) equals unity, and the measure of $E^{(2)}_{\text{demo}}$ becomes $|A(00) + A(10)|^2 = |-1/2 + 1/2|^2 = 0$. This vanishing of the quantum measure of $E^{(2)}_{\text{demo}}$ is recognizable as the familiar fact that the output beam 0 is dark in a symmetric MZI.

Thirdly, consider an event similar to the one to which our experiment is devoted, namely $E_{\text{demo}} = \{10, 01, 11\}$. In this case (as per equation (1)) only histories 01 and 11 interfere, and we find $\mu_{\text{demo}}(E_{\text{demo}}) = |i/2 + i/2|^2 + |1/2|^2 = 5/4 = 1.25$. Unlike our first two examples, this is a non-serial event, and its measure has no immediate interpretation as the probability of anything. But by designing an event-filter for E_{demo}, we will be able to interpret $\mu_{\text{demo}}(E_{\text{demo}})$ as twice the probability P that the filter will register a positive outcome: $P = \mu_{\text{demo}}(E_{\text{demo}})/2$.

Just as in [1] [9], this factor of 2 is a property of the filter and not of the system per se. It would

[9] which however would have produced a factor of 3, as mentioned earlier. Our experimental design improves this to a factor of 2.

not change if one were to insert phase shifters into any of the beams, or if the transmission and reflection coefficients of the beam splitters were other than $1/\sqrt{2}$. It is this "universality" that justifies our claim that by means of our filter we are able to "measure the quantum measure of E_{demo}".

A specific filter for the event $E_{\text{demo}} = \{01, 10, 11\}$ is shown in Figure 2, which "unfolds" the arrangement of Figure 4 below to show the underlying design more perspicuously. However, note that while in the actual experiment history 10 is rejected, here we illustrate the rejection of 00. We do this purposely to demonstrate that indeed many combinations of histories are possible that result in non-serial events. Because the polarization degree of freedom of the photon is being recruited as an ancilla in the sense of [1], the distinction between System and Filter is somewhat blurred, but with a little effort, and referring to Figure 1, one can still recognize the beam splitters BS_1, BS_2 and the mirrors M_1, M_2, and M_3, as belonging to the System, while the other optical components together with the detector and the photonic polarization itself can be recognized as belonging to the Filter. Notable are the half-wave plates (HWP) that couple the photon's polarization to its trajectory, the polarizing beam splitter PBS_1 that expels the excluded history 00, and the PBS_2 that undoes the way that the polarization was used to tag certain of the histories. (Its companion BS_3 is needed only to balance the complementary outputs associated with the HWP_2–PBS_2 stage in this unfolded schematic; it should not be interpreted as physical absorption or "loss" in PBS_2.)

Let D be the event that the photon reaches the detector. One can compute $\mu_{F,\text{demo}}(D)$ similarly to how the measures μ_{demo} were computed in the above examples, and one finds that $\mu_{F,\text{demo}}(D) = \mu_{\text{demo}}(E_{\text{demo}})/2$. If one seeks the origin of the $1/2$ in this equation, one can locate it in the fact that the final HWP_2–PBS_2 stage produces two complementary outcomes in the ancilla basis and we condition (postselect) on the detector outcome D; in the ideal symmetric setting this postselection has success probability $1/2$. This corroborates our earlier assertion that the factor of $1/2$ belongs to the filter and not to the system.

Transition to the experiment. Having established the notation and the structure of $\mu_{\text{demo}}(E_{\text{demo}})$ using the illustrative event E_{demo}, we now return to the experimental implementation. In Section 4, the event of interest is $E_{\text{exp}} = \{00, 01, 11\}$, and all subsequent references to the event-filter, recorded powers, and experimentally inferred measures pertain to this experimental event.

4 Experimental Determination of the Quantum Measure of a Photonic Event

Experimental event and event-filter. We now describe the experimental realization of the event-filter corresponding to the non-serial event $E_{\text{exp}} = \{00, 01, 11\}$. The optical network is designed such that the histories in E_{exp} interfere at the monitored output, enabling an operational estimation of the associated quantum measure. Henceforth in Sections 4 and 5 we write $E \equiv E_{\text{exp}}$ for brevity.

For easy reference, we redisplay here the essential portion of Figure 1, turned sideways in order to exhibit its inherent symmetry more clearly (and also to bring out how it realizes the first two stages of the 2-site-hopper model).

Recall that by *the system* we refer to the photon propagating within the arrangement shown in figure 3.

The mirrors (M_1, M_2) and beamsplitters (BS_1, BS_2) seen in figures 3 and 1 form a Mach-Zehnder Interferometer (MZI). However, for technical reasons, our actual experiment used the Sagnac configuration (DSI) shown in figure 4. Since the simpler MZI configuration is conceptually equivalent to the DSI configuration, we will remain with it for the short calculation that follows.

A photon incident on a (lossless) beamsplitter emerges in either the transmitted or reflected beam. The history space for our system (the photon) can thus be taken to be $\Omega^{(2,2)} = \{\mathcal{T}_1\mathcal{T}_2, \mathcal{T}_1\mathcal{R}_2, \mathcal{R}_1\mathcal{T}_2, \mathcal{R}_1\mathcal{R}_2\}$, where $\mathcal{R}_1\mathcal{T}_2$ represents the path of the photon undergoing reflection in first BS and transmission in second BS, etc. We will express these 4 histories in the

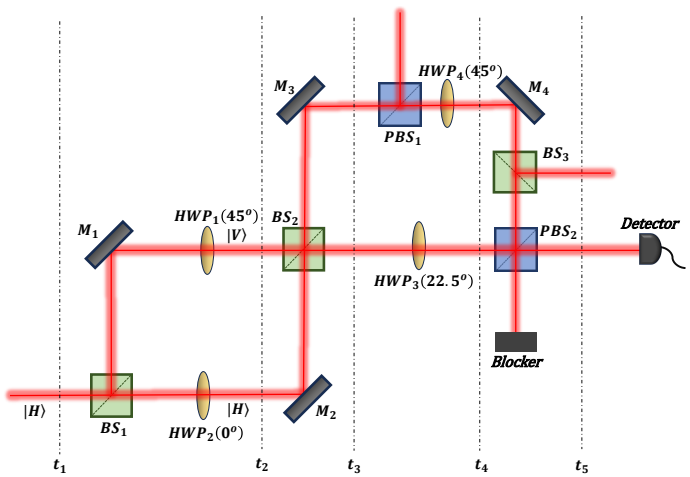

Figure 2: Pedagogical event-filter for the illustrative non-serial event $E_{\text{demo}} = \{01, 10, 11\}$, drawn as an "unfolded" version of the displaced Sagnac geometry to make the filter logic explicit. The system elements (beam splitters BS_1, BS_2 and mirrors M_1–M_3) are the same as in Fig. 1; the additional polarization optics together with the detector constitute the filter. For clarity, the excluded history is shown as 00 (removed by PBS_1) in this illustrative design. The experimentally implemented event-filter (Sec. IV), corresponding to $E_{\text{exp}} = \{00, 01, 11\}$ and rejecting history 10, is shown in Fig. 4.

simpler form used earlier: $\Omega = \{00, 01, 10, 11\}$, where the upper and lower spatial modes of the photon after a BS are labelled as 0 and 1 respectively, as marked in Fig. 3.

Aim: The aim of the experiment is to infer the value of the *quantum measure* $\mu(E)$ for the event $E = \{00, 01, 11\}$, thereby illustrating how a non-serial event can be detected experimentally, and how the value of its quantum measure can be given an experimental meaning, even when it cannot be interpreted as a probability.

Computing $\mu(E)$ in an ideal scenario: Let, t_i and r_i respectively represent the transmission and reflection coefficients of i-th beamsplitter BS_i, which is assumed to be lossless, giving $|t_i|^2 + |r_i|^2 = 1$. Assuming that $t_i, r_i \in \mathbb{R}$ and that a phase φ_i is acquired by the photon upon reflection, we obtain the amplitudes associated with the possible histories as $A(00) = r_1 e^{i\varphi_1} r_2 e^{i\varphi_2}$, $A(01) = r_1 e^{i\varphi_1} t_2$, $A(10) = t_1 t_2$, $A(11) = t_1 r_2 e^{i\varphi_2}$. Hence, from Eqn. 1, the quantum measure $\mu(E)$ for the event $E = \{00, 01, 11\}$ is found to be,

$$\mu(E) = |A(00)|^2 + |A(01) + A(11)|^2 \tag{2}$$

$$\mu(E) = \left| r_1 r_2 e^{i\varphi_1} e^{i\varphi_2} \right|^2 + \left| r_1 t_2 e^{i\varphi_1} + t_1 r_2 e^{i\varphi_2} \right|^2 \tag{3}$$

Specializing to symmetric lossless 50 : 50 beamsplitters, $t_i = r_i = \frac{1}{\sqrt{2}}$ and $\varphi_i = \frac{\pi}{2}$, we obtain for $\mu(E)$ the same value obtained earlier for the event $\{10, 01, 11\}$ i.e. E_{demo} of Section 3:

$$\begin{aligned} \mu(E) &= \left| \frac{i}{\sqrt{2}} \frac{i}{\sqrt{2}} \right|^2 + \left| \frac{i}{\sqrt{2}} \frac{1}{\sqrt{2}} + \frac{1}{\sqrt{2}} \frac{i}{\sqrt{2}} \right|^2 \\ &= \frac{1}{4} + 1 = \frac{5}{4} = 1.25 \end{aligned} \tag{4}$$

In this ideal scenario, therefore, the quantum measure associated with the event E takes a value exceeding unity, the maximum permissible value classically.

Experimental Setup: The setup actually used in our experiment is diagrammed in Fig. 4. It differs from the idealized experiment just analyzed in two main respects. First, we have replaced the Mach-Zehnder geometry (where the photon encounters two identical beamsplitters) with a displaced Sagnac geometry (a DSI interferometer), where the photon encounters the same beamsplitter twice; and second, we have used laser light rather than individual photons.

The change from MZI to DSI was done in order to mitigate noise from external vibrations. Such vibrations can affect the two paths within the MZI differently, and this path-difference would cause the relative phase between the two

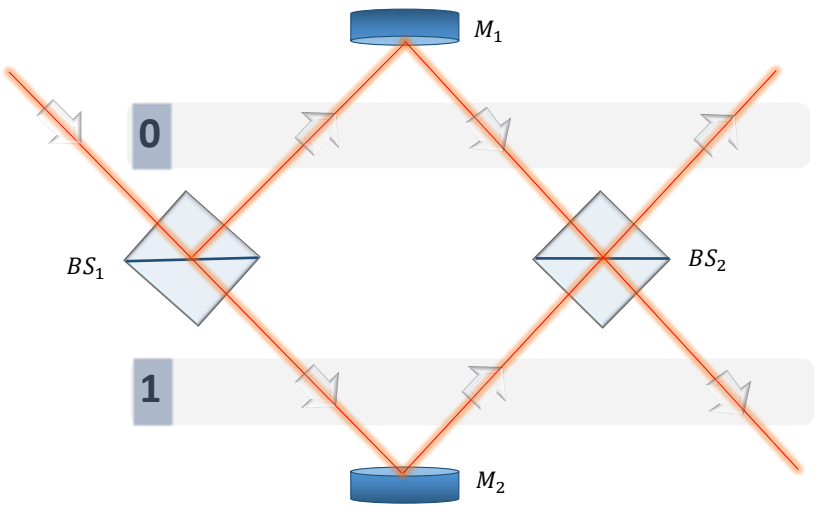

Figure 3: Conceptual schematic of the *system* (not the event-filter) used for the analytic description in Section 4: a photon propagates through two beam splitters $BS_1(t_1, r_1, \phi_1)$ and $BS_2(t_2, r_2, \phi_2)$, with mirrors M_1 and M_2 redirecting the outputs of BS_1 into the inputs of BS_2, thereby defining the four two-step histories $\Omega = \{00, 01, 10, 11\}$ (with $0/1$ denoting the upper/lower output mode after each beam splitter, as marked). This Mach–Zehnder representation is shown for clarity; the actual experimental implementation uses the displaced-Sagnac geometry and the full event-filter (including polarization optics and detection ports) is shown in Fig. 4. If iterated indefinitely to the right, this system would become an optical implementation of the two-site-hopper discussed in Refs. [14,1].

interfering beams (here, 01 and 11) to change over time, thereby degrading the interference that enters into the intensity recorded at the final detector.

The choice to use laser light rather than a single-photon source was also made to mitigate a sort of noise, in this case the "statistical noise" that would arise from sending fewer photons through the apparatus.

Though the concept of event-filter, strictly speaking, applies to a single photon, whose detection at the output port would count as a "click" in the event-filter (thereby signalling the occurrence of the event), this does not prevent an experiment using laser light from confirming that the value of the quantum measure $\mu(E)$ has been obtained correctly. It's well known that (unless nonlinear optical elements are involved) the intensity of laser light at an output port can serve as a valid proxy for the probability that the photon would arrive there in a single photon experiment, and this is all we need to conclude that our value of 1.172, is (within errorbars) the same as what would be obtained from a stream of single photons. We have provided an elementary derivation of this equivalence in the appendix. (For an analysis employing an over complete basis of coherent states, see [28] and [29].)

We turn now to the experimental details.

Light at wavelength $\lambda = 810\ nm$ emitted from a narrow bandwidth (linewidth typically $< 300\ kHz$) diode laser [$Toptica\ DL\ Pro$] provides the input for this experiment. The laser beam is coupled to a FC/PC to FC/APC Polarization Maintaining Single Mode Fiber ($PMSMF$) [$P5-780PM-FC-2$, $Thorlabs$] in order (i) to maintain the polarization while the beam propagates through the fiber, thus reducing the power fluctuation after any polarization optics, (ii) to reduce the pointing fluctuation about the transverse plane of the beam as compared to the bare beam, (iii) to render the spatial mode at the output fiber's output as Gaussian as possible. The beam is collimated using an adjustable fiber collimator [$CFC11P-B$, $Thorlabs$] that confines the divergence of the beam to less than 1 $mrad$, and a mirror then redirects the beam toward

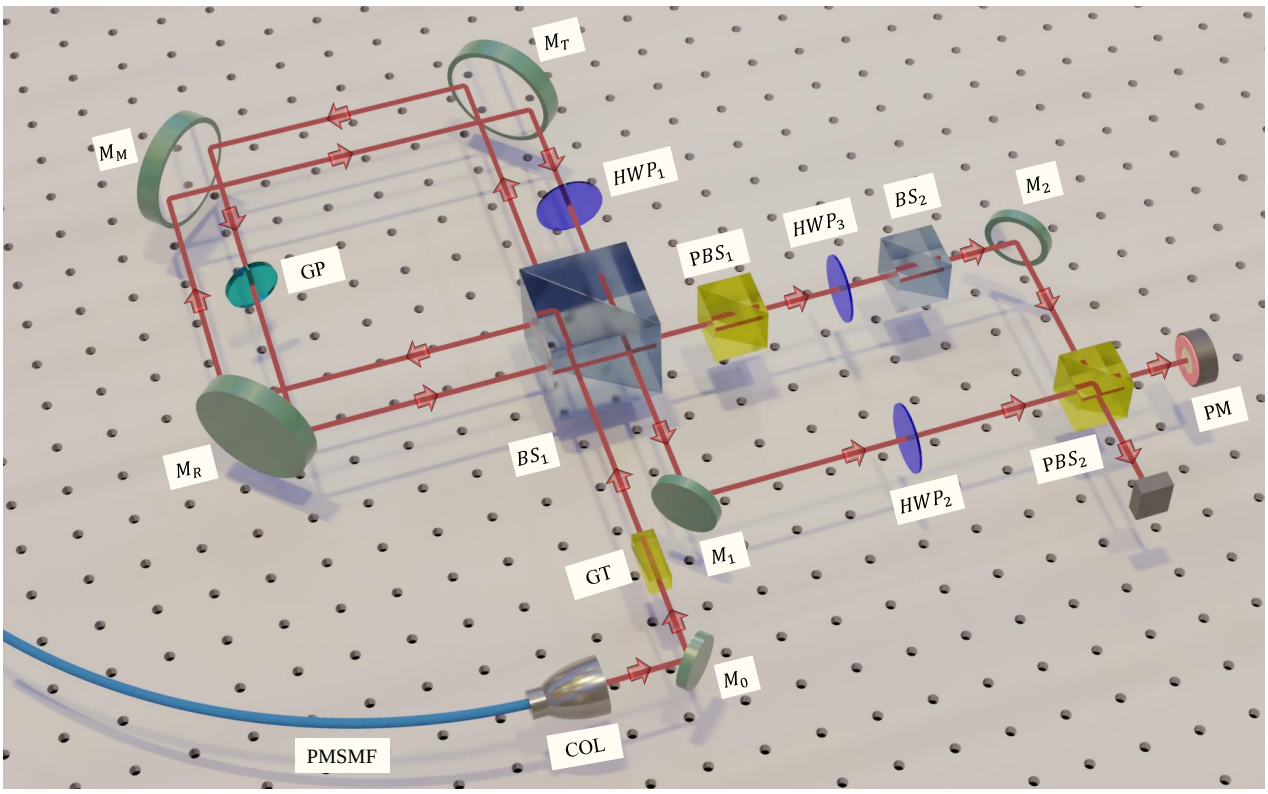

Figure 4: Experimental implementation (Section 4) of the *event-filter* for the non-serial event $E_{\text{exp}} = \{00, 01, 11\}$ (the event measured in this work). The *system* is the displaced Sagnac interferometer (DSI), in which the beam traverses the same beam splitter BS_1 twice, thereby defining the four two-step histories $\Omega = \{00, 01, 10, 11\}$; the event-filter is designed to *accept* the histories in E_{exp} and *reject* the excluded history 10. The *filter* consists of the polarization optics and output ports (e.g., HWP/PBS/auxiliary optics and the output monitored by the power meter (PM)), which use the photon's polarization as an ancilla to tag, recombine, and postselect the desired histories. The quantum measure $\mu(E_{\text{exp}})$ is inferred from the output-to-input intensity ratio recorded at the filter ports (see Section 5). For conceptual clarity, the pedagogical "unfolded" schematic in Fig. 2 corresponds to an illustrative event E_{demo} and is not the experimental event implemented here.

DSI. In order to achieve a high degree of polarization purity, a Glan Thompson Polarizer[10] (GT) [$GTH5M - B$, $Thorlabs$] with optic axis oriented to transmit the horizontal component of polarization ($|H\rangle$), is placed in the path of the beam between the Collimator and the DSI.

The horizontally polarized beam emerging from the GT is incident on the beam splitter BS_1 [$20BC17MB.2$, $Newport$] which forms the Displaced Sagnac Interferometer (DSI) together with the mirrors M_T, M_R and M_M (all of them are [5122, $Newport$]). Let, the paths associated with the anticlockwise and clockwise directions of propagation of the beam inside the interferometer be named as path-A and path-C respectively. The state at BS_1 just after the first pass is then $|\Psi_1\rangle = \frac{1}{\sqrt{2}}(|A\rangle^{(0)} + i\,|C\rangle^{(1)})\,|H\rangle$[11]. The relative phase between the two paths of the interferometer is controlled by tilting a Glass Plate GP [$WG40530$, $Thorlabs$] in path-A. In one of the paths of the interferometer (here in path-C) a half-wave plate (HWP_1) [$WPO02 - H - 810 - UM$, $NewlightPhotonics$] is placed with its fast axis oriented at 45° with respect to the horizontal, thus realizing the σ_x evolution operator. Thereby, the state at BS_1 just before the second pass becomes, $|\Psi_2\rangle = \frac{1}{\sqrt{2}}(e^{i\varphi_g}\,|A\rangle^{(0)}\,|H\rangle + i\,|C\rangle^{(1)}\,|V\rangle)$. This implies that a polarization measurement in the

[10] A Glan Thompson polarizer transmits the s-polarized component of beam (the *e-ray*) and reflects the p-polarized component of beam (the *o-ray*) of any unpolarized beam incident on it.

[11] The superscripts on the spatial modes of the system give the path information, upper and lower paths being labelled as 0 and 1 respectively

basis $\{|H\rangle, |V\rangle\}$ at one of the ports of the DSI can give information about the path of the photon inside the interferometer. The state at BS_1 after second pass becomes $|\Psi_3\rangle = \frac{1}{2}(e^{i\varphi_g}|U\rangle^{(00)}|H\rangle + i^2|U\rangle^{(10)}|V\rangle + ie^{i\varphi_g}|L\rangle^{(01)}|H\rangle + i|L\rangle^{(11)}|V\rangle)$, where $|U\rangle$ and $|L\rangle$ respectively represent the paths corresponding to the upper and lower output ports of the DSI.

After the DSI, actions on the polarization d.o.f. are performed to make the two histories 01 and 11 interfere, select the paths $00, 01$, and 11, and recombine them to ensure that any detection at the position of the power meter (PM) as shown in Fig. 4 corresponds to the occurrence of the event E. A polarizing beamsplitter PBS_1 [$PBS122$, $Thorlabs$] placed in path-U reflects the history 10 away from the setup, and a half-wave plate HWP_2 [$RZQ2.15L.0810$, $B.\ Halle$] and PBS (PBS_2) [$PBS122$, $Thorlabs$] combination placed in path-L makes the two histories $01, 11$ interfere which otherwise would have had orthogonal polarizations. HWP_2 has its fast axis oriented at 22.5° with respect to the horizontal; it physically realizes a Hadamard operator that transforms the $\{|H\rangle, |V\rangle\}$ basis to the $\{|+\rangle, |-\rangle\}$ basis [12]. Another half-wave plate HWP_3 [$RZQ2.15L.0810$, $B.\ Halle$] acts as a σ_x operator, and a 50 : 50 beamsplitter BS_2 [$BS005$, $Thorlabs$] placed in the upper arm ensures the beam from the 00 path ends up at PM without any associated bias.

Data Acquision and Analysis: The DSI is aligned in the collinear configuration, with a back-aligned GP being present in one of the paths (here, path-A). Next, the event filter is setup by placing the various polarization optics at their respective locations, keeping in mind that only the beams from $00, 01, 11$ paths should be detected at the output and the beams from 01 and 11 need to be made to interfere. Using a power meter sensor PM [sensor: $S121C$, $Thorlabs$, meter: $PM100D$, $Thorlabs$] (or a detector) the powers are recorded (i) at the input to the setup i.e., after the GT (denoted P_I) and (ii) at the output of the event filter (denoted P_E). Constructive interference is ensured by tuning the tilt of the GP in small steps while observing the power at the output and fixing it at an angle that corresponds to maximum power. Other than P_I and P_E, the powers P_{int}, P_{01}, P_{11}, P_{00} are monitored at the output of the event filter with (path-U), (path-U, path-C) and (path-U, path-A), (path-L) being blocked respectively, in order to get an idea about the interferometric phase fluctuation and individual power fluctuations over time.

Experimental data is always associated with some limitations, imperfections, noise, fluctuations, losses etc. In optical experiments there are always losses associated with absorption in the material of the optical elements. Imperfections in the optical components being used, like deviations in the splitting ratios ($T : R$) of the beamsplitters from the quoted values, polarization dependent reflections[13] from mirrors and beamsplitters, the extinction ratios of the polarization optics, the surface quality of the components, etc., modify the outcome of the experiment. Further, there are systematic instrumental errors, like the nonlinear behavior of the power meter sensor, which are a matter of characterization. The laboratory conditions, i.e., temperature, pressure, humidity, air current, etc. impact the optical alignment and the experimental data, causing a deviation in the experimental result from the theoretical value computed considering ideal conditions. Additionally, in an interferometric experiment, the phase instability inside the interferometer, wavefront distortion of the beam, beam wander of the two overlapping beams, etc. will also lead to experimental errors. Hence, the experimental data needs to be analyzed accounting for the potential sources of non-idealness while providing feasible corrections for some parameters depending on the degree they affect the experiment.

Experimental distribution of the quantum measure of E. In our implementation, the operational quantity associated with the event E is the probability that the event-filter registers a photon

[12] Here, $|+\rangle = \frac{1}{\sqrt{2}}(|H\rangle + |V\rangle)$ and $|-\rangle = \frac{1}{\sqrt{2}}(|H\rangle - |V\rangle)$

[13] In most of the optical elements $R_s \neq R_p$, i.e., the reflectivity is not the same for $s-$ and $p-$ polarizations and adds a relative phase between $s-$ and $p-$polarized components making the beam elliptically polarized.

at its designated output port (PM). With laser light (and in the absence of nonlinearities), this probability can be inferred from the ratio of optical powers at the output and input of the filter. Accordingly, in an ideal noise-free situation one would write

$$\mathcal{P}_{\text{exp}}(E) \;=\; \frac{P_E}{P_I}, \tag{5}$$

where P_I denotes the power incident on the setup (measured after the GT), and P_E denotes the power recorded at the output port of the event-filter.

In practice, neither P_I nor P_E is perfectly constant in time. Both exhibit (i) fast, apparently random fluctuations (including high-frequency oscillations that can be reduced by time-averaging), and (ii) slower systematic drifts (for example thermal or alignment drifts) that are not removed by averaging over any single acquisition window. Since P_I and P_E are recorded at different times, simply combining non-simultaneous readings can bias the estimate of $\mathcal{P}_{\text{exp}}(E)$, and therefore of the inferred quantum measure.

To propagate these fluctuations into an uncertainty on $\mathcal{P}_{\text{exp}}(E)$, we construct an *empirical distribution* of probabilities using Monte-Carlo resampling of the recorded time series:

1. We record long time traces of the input and output powers, $P_I(t)$ and $P_E(t)$.

2. From each trace we draw (with replacement) a short-time dataset of duration $\Delta t \approx 100$ s, denoted p_I and p_E respectively. This window is long enough to average over fast fluctuations, while still sampling the slow drifts across the full dataset.

3. For each draw we compute a probability estimate as the mean of the pointwise ratio,

$$\mathcal{P}^{(k)}_{\text{exp}}(E) \;=\; \left\langle \frac{p_E}{p_I} \right\rangle, \tag{6}$$

and we repeat the procedure $N = 10^5$ times to obtain the distribution $\{\mathcal{P}^{(k)}_{\text{exp}}(E)\}_{k=1}^{N}$.

Correction for absorption and surface losses of BS_1. In the displaced Sagnac geometry the photon encounters the same 2 inch beam splitter BS_1 twice. Absorption in the substrate (and additional surface losses) reduce the circulating power and therefore reduce the measured P_E. We quantify this effect via the measured net power throughput

$$\eta_s \;=\; \frac{P_T + P_R}{P_I} \;=\; T_{\text{abs}} + R_{\text{abs}}, \tag{7}$$

where P_I is the power incident on BS_1, and P_T and P_R are the transmitted and reflected powers from BS_1, respectively. Since the system passes through BS_1 twice, we correct each resampled probability by

$$\mathcal{P}^{(c)}_{\text{exp}}(E) \;=\; \frac{\mathcal{P}_{\text{exp}}(E)}{\eta_s^2}. \tag{8}$$

Filter success probability (postselection) and conversion to quantum measure. Even for an ideal, lossless implementation of the filter, the final stage has two complementary outcomes: only one corresponds to the monitored detector event at PM, while the other is routed to a complementary port that is not directed to the detector. In our implementation, the combination HWP_2–PBS_2 (used to erase the polarization tag and enable interference of the 01 and 11 histories) together with the compensating beam splitter BS_2 in the 00 arm routes the other half to a complementary port that is not directed to the detector. Thus the factor of 1/2 is a postselection success probability for the monitored outcome, not optical attenuation by PBS_2 (and it does not accumulate by inserting additional polarization beam splitters). Equivalently, the event-filter's detection probability is $\mu(E)/2$, so that the quantum measure is obtained by multiplying by the corresponding factor of 2:

$$\mu_{\text{exp}}(E) \;=\; 2\,\mathcal{P}^{(c)}_{\text{exp}}(E). \tag{9}$$

Applying this mapping to the full distribution of $\mathcal{P}^{(c)}_{\text{exp}}(E)$ yields the experimental distribution of $\mu_{\text{exp}}(E)$ reported in Fig. 5.

Experimental corrections to the theoretically expected value of the measure of E: The theoretical formula given in Eqn. 4 computes the value of the quantum measure for the event $E = \{00, 01, 11\}$ of a photonic system to be $\mu_{th}^{ideal} = 1.25$, considering the ideal system, devices, and laboratory conditions. Any loss in any part of the setup would reduce the amplitudes associated with different paths which would effectively lower the value of quantum measure obtained experimentally. Also, the computation of

μ_{th}^{ideal} considers constructive interference between the paths 01 and 11, i.e., the relative phase between the two paths of the interferometer to be $\varphi = 0$. Hence, any variation in phase from zero would only reduce the obtained interference intensity and effectively reduce the value of $\mu(E)$. Therefore, it is important to have an estimation of the range within which the experimentally obtained quantity would lie, given the non-ideal laboratory setting.

For event $E = \{00, 01, 11\}$, the modified theoretical expression for measure considering the effect of different parameters associated with the experiment is given as,

$$\begin{aligned}\mu_{\varphi}^{e}(E) = &|A_e(00)|^2 \\ &+ |A_e(01) + \exp(i\varphi)A_e(11)|^2\end{aligned} \tag{10}$$

The second term in the above expression represents the interference intensity of $01, 11$ beams in presence of interferometric phase variation. The amplitudes $A_e(\gamma)$ for different paths γ are computed considering the transmission of the system through the optical components present in the respective paths in the setup. This includes taking into account the overall transmission factor (η) through the components, splitting ratio $T : R$ ratio of the beamsplitters, the extinction ratio of the polarization optics, possible changes in the polarization due to the HWP misalignment[14], and polarization dependent reflectivity $R_p \neq R_s$ of the mirrors used etc. The variation in the relative phase φ is determined as,

$$\varphi = \arccos\left(\frac{I(\varphi) - I_1 - I_2}{2\sqrt{I_1 I_2}}\right) \tag{11}$$

provided the following condition is satisfied,

$$I(\varphi) \leq I_1 + I_2 + 2\sqrt{I_1 I_2} \tag{12}$$

Here, the intensities $I(\varphi)$, I_1 and I_2 are respectively determined from the recorded power data P_{int}, P_{01} and P_{11}. A distribution for the phase Φ is obtained by choosing samples randomly from $I(\varphi)$, I_1 and I_2, and determining φ for which the criteria in Eqn. 12 is satisfied. Since, determination of the phase depends on the distribution of the powers, Φ does not only represent the phase variation, but possible effect due to power fluctuation as well. The distribution Φ and distribution of the amplitudes $A_e(00), A_e(01), A_e(11)$ associated with the inherent uncertainty in the parameters of the real components, gives a range of possible $\mu_{\varphi}^{e}(E)$ values resulting in a distribution $\mu_{th}(E)$, for the event E.

[14]The uncertainty associated with the HWP orientation, here, is related to the random detection noises and random power variations as the fast axis of a HWP is not aligned looking at the label of the rotation mounts but from the observation of powers at the output ports of a PBS placed after it.

5 Results and Statistical Analysis

The histogram plot for the experimentally obtained distribution of measure $\mu_{exp}(E)$ for the event $E = \{00, 01, 11\}$ of the photonic system is shown in Fig.5. The distribution is asymmetric in nature, with the asymmetry mostly arising from the systematic temporal drifts of the power data P_E and P_I, recorded at different times, that are used in the determination of μ_{exp}. Because $\mu_{\exp}(E)$ is asymmetric, we summarize its central value by the median and its spread by the lower and upper percentile widths defined below.

Percentile-based separations for an asymmetric distribution. Since $\mu_{\exp}(E)$ is generally non-Normal and asymmetric, we quantify (i) the central value by the median μ_e of the sampled distribution, and (ii) the spread by the percentile-based offsets $\sigma_{\pm}$, where $\mu_{84.13}$ and $\mu_{15.87}$ denote the 84.13^{th} and 15.87^{th} percentiles of the sampled distribution, respectively:

$$\sigma_+ = \mu_{84.13} - \mu_e, \qquad \sigma_- = \mu_e - \mu_{15.87}. \tag{13}$$

We compare the experimental median μ_e with a reference value μ_0, chosen as either the classical bound 1 or the median μ_t of the theoretical prediction including experimental imperfections. Using the fixed experimental percentile widths σ_+ and σ_- defined in Eq. (13), we report both normalized separations:

$$\begin{aligned}S_+(\mu_0) &= \frac{\mu_e - \mu_0}{\sigma_+}, \\ S_-(\mu_0) &= \frac{\mu_e - \mu_0}{\sigma_-}.\end{aligned} \tag{14}$$

The subscripts $+$ and $-$ specify the upper and lower widths about the experimental median, not a classification of samples relative to μ_0; both

ratios describe the same signed displacement using different widths. They are descriptive quantities, not Gaussian z-scores or tail-probability estimates.

For the event $E = \{00, 01, 11\}$, we report the experimentally obtained value of measure to be $\mu_e(E) : 1.172^{+0.013}_{-0.019}$. The 68.26%, 95.44% and 99.74% confidence intervals (CI) associated with the 1σ, 2σ and 3σ percentile-based regions of the distribution, are presented with three different shaded regions in the plot. The theoretical expectation of measure under ideal laboratory conditions is shown with a red line at $\mu^{(ideal)}(E) = 1.25$. Considering imperfections, losses, power fluctuation, phase variation and other uncertainties associated with different parameters that can impact the experimental outcome, the value of the expected measure is obtained to be $1.182^{+0.013}_{-0.011}$, representing the median and $\pm 1\sigma$ error of the distribution $\mu_{th}(E)$. The vertical blue line and the blue band in the plot respectively represent the *median* and the 1σ uncertainty of $\mu_{th}(E)$. This blue band can be considered as theoretical uncertainty band. The median (central) theoretical value of measure corresponding to $\mu_{th}(E)$ is denoted by μ_t.

Considering only the effects of the real optical components present in the paths and disregarding the power and phase fluctuations while assuming $\varphi = 0$, the theoretically expected value of measure for the event $E = \{00, 01, 11\}$ is obtained to be 1.2095 ± 0.0015. Next, considering the effects of real components and the power variation while ignoring phase fluctuation, the expected theoretical value of measure is computed to be $1.1981^{+0.0084}_{-0.0075}$ from the expression below,

$$\mu^{e}_{\varphi=0}(E) = I_e(00) + I_e(01) + I_e(11) + 2\sqrt{I_e(01)\ I_e(11)} \tag{15}$$

Here, the intensities $I_e(\gamma)$ are obtained from the experimentally recorded data, P_{00}, P_{01}, P_{11} from the following expression, where P_γ denotes the experimentally recorded power corresponding to the history $\gamma \in \{00, 01, 11\}$ (i.e., $P_\gamma \in \{P_{00}, P_{01}, P_{11}\}$ in this work),

$$I_e(\gamma) = \frac{2}{\eta_s^2}\left(\frac{P_\gamma}{P_I}\right) \tag{16}$$

Relative to the classical probability bound $\mu_{C(\max)} = 1$, the experimental median has normalized separations $S_+(1) = 13.32$ and $S_-(1) = 8.89$, expressing the same excess above unity in units of the upper and lower experimental percentile widths respectively, implying that the quantity μ_e is non-classical in nature. Indeed, for comparison with the theoretical median μ_t computed within the framework of Quantum Measure Theory (QMT) for the actual laboratory conditions, the absolute separations are $|S_+(\mu_t)| = 0.78$ and $|S_-(\mu_t)| = 0.52$, and the theoretical median lies within the experimental central 68.26% percentile interval.

Unlike a classical measure, a quantum measure incorporates quantum interference and therefore can take values greater than one.

6 Discussion

In an experiment that begins with a "preparation" and ends with a "registration", these two events are "initial" and "final" only to the extent that we agree to ignore events which took place either earlier than the first or later than the second; this we ordinarily do for the sake of simplicity. But why should we ignore as well those events that happened at "in-between" times? Even if, for the sake of argument, we grant that such *in-between* events are inaccessible to observation, they nevertheless acquire a meaning in the context of history-based frameworks such as quantum measure theory.

Consider for example the particular event E which is the subject of our experiment, and whose verbal description could be "the photon did not follow path 10". The known initial and final locations of the photon do not by themselves determine whether or not E happened, but that does not mean that nothing can be said on the matter. In a stochastic world, one would not expect to be able to deduce with certainty whether E happened, but what theory does provide in the classical case is a *probability* for E to have happened. In the quantum case, it provides a kind of "non-classical probability" or generalized measure for E: its *quantum measure*, which in the present instance is $\mu(E) = 5/4$.

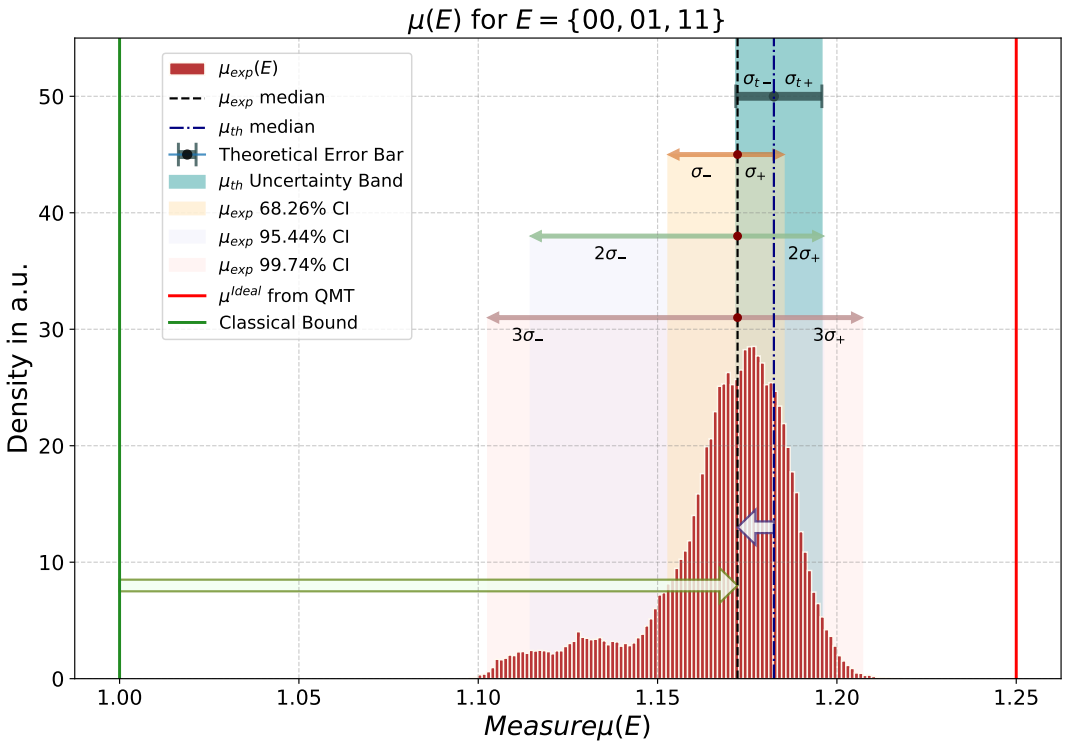

Figure 5: Experimental result for the *experimental* non-serial event $E_{\text{exp}} = \{00, 01, 11\}$ implemented with the event-filter of Fig. 4 (Section 4). Shown is the histogram of the empirically inferred distribution of the quantum measure $\mu_{\text{exp}}(E_{\text{exp}})$ obtained from the measured input/output powers of the event-filter (Section 5). The shaded regions indicate the central 68.26%, 95.44%, and 99.74% confidence intervals of the (generally non-Gaussian) distribution. The dashed vertical line marks the experimental median. The blue vertical line and blue band indicate the median μ_t and 1σ uncertainty of the theoretical distribution $\mu_{\text{th}}(E_{\text{exp}})$ obtained after propagating experimental imperfections (Section 5); the black marker shows the corresponding theoretical error bar. The red line denotes the ideal theoretical value $\mu^{(\text{ideal})}(E_{\text{exp}}) = 5/4$, and the green line marks the classical bound $\mu_{C(\max)} = 1$. (The pedagogical example of Section 3 uses a different illustrative event and is not the one shown here.)

But how exactly is one to understand the physical meaning of this number? On being presented for the first time with the concept of *quantum measure*, someone might well ask whether $\mu(E)$ has any direct experimental significance outside of the special case where E is an instrument-event and $\mu(E)$ can therefore be interpreted as a classical probability.

If, as we hope, theoretical developments based on the quantum measure can help to resolve the interpretational paradoxes of quantum mechanics (if μ can find a role in a more complete description of the micro-world), this would amply answer the question being raised. We are not there yet, but a big step in that direction would be any way to put $\mu(E)$ on a more immediate experimental footing. A procedure to do precisely that is what reference [1] provided. Indeed, it implicitly showed, via the concept of what we are calling an *event filter*, how to bring not only the *measure* of an event, but also in a certain sense the *event concept* itself, into direct contact with experiment. In effect, reference [1] put forward two main claims.

The first claim was that $\mu(E)$ can indeed be measured experimentally. For that purpose, it introduced an ancilla-based protocol that could in principle furnish an event-filter for an arbitrary event E. However, the photonic event $E_{\text{exp}} = \{00, 01, 11\}$ of our experiment makes a particularly interesting test case. Its measure exceeds unity, and therefore admits of no interpretation as a probability in the classical sense. Moreover E appears to correspond to

no selfadjoint operator, and it does not seem possible to determine $\mu(E)$ by any sequence of simple measurements of projective or POVM type. Thus, none of the more familiar measurement procedures seem applicable to this event. However, the protocol of [1] does apply.

Inspired by this protocol, our experiment employs a design, which however differs from that of [1] in that the "ancillas" are in some sense integrated into the "system", with the photon's polarization contributing the necessary extra degrees of freedom. In relation to [1] the resulting event-filter improves the "counting efficiency" from 1/3 to 1/2. We think that one can trace the reason for this improvement to the fact that in place of two separate ancillas that couple only once to the system, our design uses in effect a single ancilla that couples twice to the system.

Within experimental error, our event-filter correctly determined the measure of event E to be 5/4, and in particular to be greater than 1 by 13.32 upper or 8.89 lower experimental percentile widths. Our table-top experiment uses only commonly employed pieces of optical apparatus, and it would not be difficult to predict its outcome by the ordinary procedure of evolving a state-vector via the Schrödinger equation. However, such a computation would fail utterly to bring out how the apparatus acts as a filter for a very simple and definite "in-between" event E — a specific set of three photon trajectories. A comment on "just interference" is in order. Of course the optical network can be modeled and its output intensities predicted within standard quantum optics. What is nontrivial is that, for a genuinely non-serial *system event* E, no single output-port intensity of the unfiltered system corresponds to $\mu(E)$, because the contributing histories do not define a single-time observable. The role of the event-filter is precisely to implement an operational yes/no question about E by converting it into a detector event D with ordinary probability $P(D) \leq 1$, and with a calibration factor relating $P(D)$ to $\mu(E)$.

Although our experiment employed full-power laser light as the source, its results would apply equally to an ensemble of single photons, because an interference pattern generated from a coherent source of light (exhibiting wave nature) is equivalent to the average pattern produced by an ensemble of single photons (exhibiting corpuscular nature). This equivalence is discussed further in the appendix, where it is seen to rest on very elementary features of quantum field theory.

The second main claim implicit in reference [1] was that the event-filters proposed therein are, in a well-defined sense, *non-destructive* (exactly as the name "filter" suggests). By this we mean that when the detector "clicks", the resulting "collapsed wave function" of the "system" (in this case the photon) is whatever results when one evolves the initial wave function by summing over precisely those paths that correspond to the event E. (In particular, the interference terms between pairs of these paths are not disturbed.)[15]

Because our experiment ends up absorbing the photon, it could not address this second claim directly.

However a pair of relatively simple modifications would allow it to do so.

Firstly, in order to avoid destroying the photon, one could (in the spirit of a negative-result measurement) remove the detector from the main output port and instead install detectors on all the remaining output ports. A positive outcome or "click" would then be signalled by these complementary detectors *not registering* the photon, which therefore would survive to be subjected to further tests. Secondly, one would need to replace the laser with a single-photon source so that the distinction between "click" and "no click" would become meaningful. Both of these modifications to the experimental setup would be straightforward, but they would make the collection of adequate statistics more tedious, and they would require a re-consideration of the loss factor depending on the detection efficiency of the single-photon detectors.

Then, in order to test whether the event filter was functioning as claimed, one would need to introduce, downstream from the filter per se, some

[15] In this way, one obtains a technique for state-preparation that might conceivably be useful in applications like quantum computing.

type of "state tomograph" designed to verify that the effective state of the emergent photon was the one determined by the propagation-amplitudes exhibited in equation 2.

Imagine then that these modifications have been made and the experiment carried out. What will we have learned thereby about the microworld? At an intuitive level, one would like to believe that when "the detector clicks", it is informing us that event E has actually happened. Appealing as it is, this conclusion must remain in abeyance until the notorious "quantum foundational" puzzles are more fully resolved than they are at present. However, if it is ultimately upheld it will answer, in the particular case of our experiment, the question this paper began with: What are we measuring when we perform a quantum measurement?.

7 Conclusion

This paper presents an experiment that demonstrates how the *quantum measure* of a photonic event can be determined, not only theoretically but practically. It does this for the specific experimental event, $E_{\text{exp}} = \{00, 01, 11\}$, and confirms with near certainty that its experimentally inferred measure $\mu(E_{\text{exp}})$ exceeds the maximum value permissible for a classical event (namely probability = 1).

The experiment is performed by devising an optical setup which selects for the photon paths that belong to E_{exp}. Equivalently it "filters out" the photon paths that do not belong to E_{exp}, which it does by arranging for the photon's polarization to tag them for rejection. In this way, it provides a non-destructive procedure allowing inferences about the intermediate processes that a micro-system undergoes during its evolution from preparation to detection.

For $\mu(E_{\text{exp}})$, the experiment reports $1.172^{+0.013}_{-0.019}$. The theoretical median, calculated accounting for the laboratory conditions and imperfections in the optical elements, lies within the experimental central 68.26% percentile interval. The experimental median exceeds the classical probability bound of 1 by 13.32 upper or 8.89 lower percentile widths. It thus bears witness to a large amount of constructive interference between the histories (photonic trajectories) that comprise the event E_{exp}.

By bringing the framework of Quantum Measure Theory into the laboratory, our experiment enhances QMT's empirical support, hopefully paving the way for foundational studies that could give us a physical model of microscopic events. Such a model would answer the pivotal question posed earlier: What happened in between the initial emission and the final detection of the photon?

The quantum measure can be thought of as a sort of generalized Born rule that attributes generalized probabilities (possibly exceeding unity) to non-instrument events that are experimentally inaccessible by conventional quantum measurement. In relation to such an event, an event-filter of the type reported here can be thought of as a sort of *active Fresnel zone plate* that selects a family of light-rays which a purely passive zone-plate cannot access. Beyond its purely theoretical implications, such a filter potentially opens up opportunities for innovative quantum circuits and new protocols in the field of quantum computing and quantum information more generally.

8 Author Contributions

S.C. performed the experiment, acquired the data, and carried out the analysis. R.D.S. formulated the theory underlying the experiment, building on his earlier work on quantum measure theory. U.S. conceived, designed, and supervised the experiment and worked closely with R.D.S. on developing its theoretical aspects. All authors contributed to writing the manuscript.

9 Acknowledgements

U.S. is grateful for the hospitality of Perimeter Institute where part of this work was carried out. Research at Perimeter Institute is supported in part by the Government of Canada through the department of Innovation, Science and Economic Development Canada and by the Province of Ontario through the Ministry of Economic Development, Job Creation and Trade. This research was also supported in part by the Simons Foundation

through the Simons Foundation Emmy Noether Fellowship Program at Perimeter Institute. U.S. also acknowledges partial support provided by the Ministry of Electronics and Information Technology (MeitY), Government of India under a grant for Centre for Excellence in Quantum Technologies with Ref. No. 4(7)/2020-ITEA as well as partial support from the National Quantum Mission of the DST.

APPENDIX – Relating multi-photon to single-photon experiments

It is generally accepted that in an experiment like ours, the intensity of laser light at a particular output port can serve as a valid proxy for the probability that the photon would arrive there in a single photon experiment. In our case, this means that the ratio P_E/P_I can be interpreted as the probability that a single photon released by the laser would arrive at the photodetector PM. Since this relationship was presupposed by our discussion in the main text, we derive it here. In fact we provide two derivations. The first derivation models the source as a coherent state; the second derivation generalizes the first to a much broader class of sources.

Given that our derivations are elementary, using little more than the first properties of creation and annihilation operators, we hope they will hold some independent interest. For an analysis employing an overcomplete basis of coherent states, see [28].

It seems simplest to couch our analysis in terms of wave-packets or "modes", which propagate from source to detector. To each mode there will correspond an annihilation operator a and a creation operator a^*, and also a *coherent state* $|\alpha\rangle$, which generalizes to field theory the description of a minimum-uncertainty wave-packet oscillating back and forth in a harmonic potential. Such a state provides (when highly excited) an optimal approximant to a solution of the classical equations of motion of the electromagnetic field (or of any other bosonic field that one might be considering). The two modes of interest will be that emitted by the source and the "sub-mode" thereof which arrives at the desired output after passage through the apparatus. We will designate them as 'a' (input) and 'b' (output) respectively, and normalize the associated creation/annhilation operators in the usual manner suited to a particle representation, $[a, a^*] = [b, b^*] = 1$.

Consider first the case of a one-particle state such as a single photon source would emit, namely $a^* |0\rangle$ (where $|0\rangle$ denotes the vacuum). The amplitude that this photon would be received at the output port is given by the inner product, $\langle 0| ab^* |0\rangle$, of $a^* |0\rangle$ with $b^* |0\rangle$, the state that represents a single photon arriving at the port. The probability of reception is thus the absolute square of $\langle 0| ab^* |0\rangle$. Because a annihilates the vacuum, we can also write $\langle 0| ab^* |0\rangle$ as $\langle 0| [a, b^*] |0\rangle$ or simply as $[a, b^*]$, since $|0\rangle$ was normalized to $\langle 0|0\rangle = 1$. Here we have used the fact that in a linear ("free") field theory, a commutator like $[a, b^*]$ reduces to a c-number. The probability we're after is therefore

$$p_E = |[a, b^*]|^2 \tag{17}$$

Consider next the case where the source emits a multiparticle coherent state

$$|\psi\rangle = |\alpha\rangle = \exp\{\alpha a^*\} |0\rangle \tag{18}$$

(where for simplicity we work with the unnormalized state-vector). How many photons would be present, on average, at the input and output ports? The answer is given by the expectation-values of the respective number operators a^*a and b^*b, which are

$$\begin{aligned} P_I &= \langle\psi| a^*a |\psi\rangle / \langle\psi|\psi\rangle \quad \text{and} \\ P_E &= \langle\psi| b^*b |\psi\rangle / \langle\psi|\psi\rangle \ . \end{aligned} \tag{19}$$

We can compute both at once if we notice that for *any* pair of annihilation operators, a and b, and any parameter α, one has

$$\begin{aligned} b \exp\{\alpha a^*\} |0\rangle &= [b, \exp\{\alpha a^*\}] |0\rangle \\ &= [b, \alpha a^*] \exp\{\alpha a^*\} |0\rangle \\ &= \alpha [b, a^*] \exp\{\alpha a^*\} |0\rangle \end{aligned}$$

where the second equality used the fact that $[b, \cdot]$ is a *derivation*, and also that, as a c-number, $[b, \alpha a^*]$ commutes with the exponent αa^*. Substituting $b = a$ on one hand and $b = b$ on the other hand furnishes the pair of equations

$$a |\alpha\rangle = \alpha [a, a^*] |\alpha\rangle = \alpha |\alpha\rangle \tag{20}$$

and

$$b\,|\alpha\rangle = \alpha[b, a^*]\,|\alpha\rangle \tag{21}$$

The first of these equations is nothing but the defining equation for a coherent state. It says that $|\alpha\rangle$ is an eigenvector of a with eigenvalue α. The second equation says that $|\alpha\rangle$ is *also* an eigenvector of b, but with the eigenvalue $[b, a^*]\alpha$. (Thus, a coherent state is an eigenvector of *every* annihilation operator.)

Now it's true in general that $\langle\psi|\,a^*a\,|\psi\rangle = \langle a\psi|a\psi\rangle$, the squared norm of $a\,|\psi\rangle$. But since for $|\psi\rangle = |\alpha\rangle$ both $a\,|\psi\rangle$ and $b\,|\psi\rangle$ are multiples of $|\psi\rangle$, it's immediate that the squared ratio of their norms is the squared ratio of these multiples. In other words,

$$P_E/P_I = |[b, a^*]\alpha|^2/|\alpha|^2 = |[b, a^*]|^2 \tag{22}$$

precisely the single-photon probability p_E we found above! (Of course p_E could also have been written as p_E/p_I, p_I denoting the probability[16] to find the photon at its source, which is unity by definition. For completeness, we may also mention that the separate values for P_I and P_E in equations (19) would have been $P_I = |\alpha|^2/\langle\alpha|\alpha\rangle$ and $P_E = |\alpha|^2|[b, a^*]|^2/\langle\alpha|\alpha\rangle$.)

This completes our demonstration, but one might wonder, Why did it work?, and one might ask, What about other input states beside just a single photon or a coherent state of them? As it happens, the answer to the first question leads to a theorem that answers the second question for a much larger class of states ψ, including states with a definite number of photons.

Proof of a more general equivalence

We preserve the notations from above. In particular ψ (which we now take to be normalized to $\langle\psi|\psi\rangle = 1$) will be the state "emitted by" our source. The expected number of particles (photons) received at the output port b is then

$$n_b = \langle\psi|b^*b|\psi\rangle = ||b\psi||^2\ , \tag{23}$$

while the average number emitted by the source is similarly

$$n_a = \langle\psi|a^*a|\psi\rangle = ||a\psi||^2 \tag{24}$$

[16]In these equations, we have used small p to suggest "probability" and big P to suggest "power".

A review of the earlier demonstration brings to light the feature that the state-vectors which entered into it always came in pairs, ψ cum ψ', so related that the application of any annihilation operator to ψ produced a scalar multiple of ψ', thereby reducing the whole calculation to a comparison of these multiples. And if one looks further for the reason behind this feature, one can identify it as being the fact that the vectors ψ always had the form, $\psi = F(a^*)\,|0\rangle$. We claim that for any vector ψ of this form the ratio P_b/P_a assumes the same value, namely the absolute square of $[b, a^*]/[a, a^*]$.

The proof of this claim will basically repeat our earlier derivation, where now we set

$$\psi = |F\rangle = F(a^*)\,|0\rangle \tag{25}$$

for some (sufficiently regular) function $F(x)$, normalized such that $\langle F|F\rangle = 1$. Applying the annihilation operators a and b to $|F\rangle$, we find

$$\begin{aligned} a\,|F\rangle &= aF(a^*)\,|0\rangle = [a, F(a^*)]\,|0\rangle \\ &= [a, a^*]F'(a^*)\,|0\rangle \end{aligned} \tag{26}$$

$$\begin{aligned} b\,|F\rangle &= bF(a^*)\,|0\rangle = [b, F(a^*)]\,|0\rangle \\ &= [b, a^*]F'(a^*)\,|0\rangle \end{aligned} \tag{27}$$

where the prime on F denotes differentiation. Consequently $\psi = |F\rangle$ does indeed have a companion-vector ψ', which we may take to be

$$\psi' = F'(a^*)\,|0\rangle\ , \tag{28}$$

so that

$$a\,\psi = \lambda_a\,\psi' \qquad b\,\psi = \lambda_b\,\psi' \tag{29}$$

with

$$\lambda_a = [a, a^*] \qquad \lambda_b = [b, a^*] \tag{30}$$

Then the ratio n_b/n_a is simply

$$\frac{n_b}{n_a} = \frac{|\lambda_b|^2||\psi'||^2}{|\lambda_a|^2||\psi'||^2} = \left|\frac{\lambda_b}{\lambda_a}\right|^2 = \left|\frac{[b, a^*]}{[a, a^*]}\right|^2 \tag{31}$$

Therefore

$$n_b/n_a = |[b, a^*]/[a, a^*]|^2\ , \tag{32}$$

a "universal" ratio[17] that is entirely independent of the choice of the free function F. This holds

[17]Of course $\lambda_a[a, a^*] = 1$ for us, because we have normalized a that way, but we have retained λ_a and $[a, a^*]$ because, (1) it is sometimes convenient to use a different normalization, and (2) writing things this way preserves the parallelism between a and b.

in particular:

- for $F(x) = x$ (single-photon experiment),
- for $F(x) \propto \exp(\alpha x)$ (laser-like coherent-state experiment), and
- for $F(x) \propto x^N$ (experiment with precisely N photons, all occupying the same mode).

Notice here that our proof has absorbed the single-photon case into the case of general F. That doing so was legitimate is easily established by noticing first that the choice, $F(x) = x$, yields $\psi = F(a^*)\,|0\rangle = a^*\,|0\rangle$, and then observing further that when $\psi = a^*\,|0\rangle$, the expectation $\langle\psi|n_b|\psi\rangle$ is nothing but the probability for the photon to be present at the output port (because[18] the random variable n_b can then only assume the values 0, 1).

Remark. The derivation would not change if we were to replace 'a' in 'P_a' by some third annihilation operator (perhaps belonging to some other fraction of the original beam, exiting from a different output port). We would then find for the ratio of powers at two distinct output ports:

$$n_b/n_c = |[b, a^*]/[c, a^*]|^2 \ , \tag{33}$$

which also follows from the equality $\lambda_b/\lambda_c = (\lambda_b/\lambda_a)(\lambda_c/\lambda_a)$.

To conclude this appendix, let us record here a lemma, abstracted from the above proofs, that isolates the formal mathematical basis of our derivations. We will state it in terms of "annihilation operators" and their adjoints, the associated "creation operators". By annihilation operators we will mean a collection of operators which: annihilate a vector $|0\rangle$ called the vacuum; commute mutually among themselves; and yield a complex multiple of the identity operator when commuted with any creation operator.

LEMMA. Let A be a set of annihilation operators, and let a be an element of A. Let $F(z)$ be a sufficiently regular[19] complex function of z, and set $|\psi\rangle = F(a^*)\,|0\rangle$. Then for any $b, c \in A$

$$\frac{\langle\psi|b^*b|\psi\rangle}{\langle\psi|c^*c|\psi\rangle} = \left|\frac{[b, a^*]}{[c, a^*]}\right|^2 \tag{34}$$

[18] or more formulaically, because $\langle\psi|n_b|\psi\rangle = |\langle\psi|b^*\,|0\rangle\rangle|^2$

[19] We have stated the lemma in the same informal manner as we have adopted for the whole of this appendix, but we have included the phrase "sufficiently regular" in order to indicate that some condition on F of differentiability or holomorphicity would be needed in any rigorously formulated version of the lemma.

References

[1] Álvaro Mozota Frauca and Rafael Dolnick Sorkin. How to measure the quantum measure. *International Journal of Theoretical Physics*, 56(1):232–258, jan 2017. https://doi.org/10.1007/s10773-016-3181-x.

[2] A. J. Leggett. Experimental approaches to the quantum measurement paradox. *Foundations of Physics*, 18(9):939–952, 1988. https://doi.org/10.1007/bf01855943.

[3] A J Leggett. Realism and the physical world. *Reports on Progress in Physics*, 71(2):022001, jan 2008. https://doi.org/10.1088/0034-4885/71/2/022001.

[4] Yakir Aharonov, David Z. Albert, and Lev Vaidman. How the result of a measurement of a component of the spin of a spin-1/2 particle can turn out to be 100. *Phys. Rev. Lett.*, 60:1351–1354, Apr 1988. https://doi.org/10.1103/PhysRevLett.60.1351.

[5] I. M. Duck, P. M. Stevenson, and E. C. G. Sudarshan. The sense in which a "weak measurement" of a spin-1/2 particle's spin component yields a value 100. *Phys. Rev. D*, 40:2112–2117, Sep 1989. https://doi.org/10.1103/PhysRevD.40.2112.

[6] A. Matzkin. Weak values from path integrals. *Phys. Rev. Res.*, 2:032048, August 2020. https://doi.org/10.1103/PhysRevResearch.2.032048.

[7] Rafael D. Sorkin. Quantum mechanics as quantum measure theory. *Modern Physics Letters A*, 09(33):3119–3127, 1994. https://doi.org/10.1142/S021773239400294X.

[8] Robert B. Griffiths. Consistent histories and the interpretation of quantum mechanics. *Journal of Statistical Physics*, 36(1–2):219–272, 1984. https://doi.org/10.1007/BF01015734.

[9] Robert B. Griffiths. Consistent interpretation of quantum mechanics using quantum trajectories. *Phys. Rev. Lett.*, 70:2201–

2204, Apr 1993. https://doi.org/10.1103/PhysRevLett.70.2201.

[10] James B. Hartle. Spacetime quantum mechanics and the quantum mechanics of spacetime, 1993. https://doi.org/10.48550/arXiv.gr-qc/9304006.

[11] Murray Gell-Mann and James B. Hartle. Classical equations for quantum systems. *Phys. Rev. D*, 47:3345–3382, Apr 1993. https://doi.org/10.1103/PhysRevD.47.3345.

[12] Roland Omnès. Logical reformulation of quantum mechanics. I. Foundations. *Journal of Statistical Physics*, 53(3–4):893–932, 1988. https://doi.org/10.1007/BF01014230.

[13] C. J. Isham and N. Linden. Information entropy and the space of decoherence functions in generalized quantum theory. *Phys. Rev. A*, 55:4030–4040, Jun 1997. https://doi.org/10.1103/PhysRevA.55.4030.

[14] Stanley P. Gudder and Rafael D. Sorkin. Two-site quantum random walk. *General Relativity and Gravitation*, 43(12):3451–3475, Dec 2011. https://doi.org/10.1007/s10714-011-1245-z.

[15] Nicolaas P. Landsman. *Born Rule and its Interpretation*, pages 64–70. Springer Berlin Heidelberg, Berlin, Heidelberg, 2009. https://doi.org/10.1007/978-3-540-70626-7_20.

[16] Wendell H. Furry. Conference on the foundations of quantum mechanics. 1962. https://www.exhibit.xavier.edu/conf_qm_1962/2/.

[17] Matthew Leifer. Is the quantum state real? An extended review of ψ-ontology theorems. *Quanta*, 3(1):67–155, 2014. https://doi.org/10.12743/quanta.v3i1.22.

[18] Wojciech H. Zurek. Decoherence and the Transition from Quantum to Classical. *Physics Today*, 44(10):36–44, 10 1991. https://doi.org/10.1063/1.881293.

[19] George F.R. Ellis. On the limits of quantum theory: Contextuality and the quantum–classical cut. *Annals of Physics*, 327(7):1890–1932, 2012. July 2012 Special Issue. https://doi.org/10.1016/j.aop.2012.05.002.

[20] R. P. Feynman. Space-time approach to non-relativistic quantum mechanics. *Rev. Mod. Phys.*, 20:367–387, Apr 1948. https://doi.org/10.1103/RevModPhys.20.367.

[21] Sukanya Sinha and Rafael D. Sorkin. A sum-over-histories account of an EPR(B) experiment. *Foundations of Physics Letters*, 4(4):303–335, Aug 1991. https://doi.org/10.1007/BF00665892.

[22] James B. Hartle. The spacetime approach to quantum mechanics. *Vistas in Astronomy*, 37:569–583, 1993. https://doi.org/10.1016/0083-6656(93)90097-4.

[23] Roger Penrose. On the gravitization of quantum mechanics 1: Quantum state reduction. *Foundations of Physics*, 44(5):557–575, jan 2014. https://doi.org/10.1007/s10701-013-9770-0.

[24] C. J. Isham and N. Linden. Quantum temporal logic and decoherence functionals in the histories approach to generalized quantum theory. *Journal of Mathematical Physics*, 35(10):5452–5476, 10 1994. https://doi.org/10.1063/1.530759.

[25] Rafael D. Sorkin. On the Role of Time in the Sum Over Histories Framework for Gravity. *Int. J. Theor. Phys.*, 33:523–534, 1994. https://doi.org/10.1007/BF00670514.

[26] Rafael D. Sorkin. Quantum measure theory and its interpretation, 1997. https://doi.org/10.48550/arXiv.gr-qc/9507057.

[27] J. B. Hartle. Quantum kinematics of spacetime. II. A model quantum cosmology with real clocks. *Phys. Rev. D*, 38:2985–2999, Nov 1988. https://doi.org/10.1103/PhysRevD.38.2985.

[28] Bo-Sture K Skagerstam. On the three-slit experiment and quantum mechanics. *Journal of Physics Communications*, 2(12):125014, 2018. https://doi.org/10.1088/2399-6528/aaf683.

[29] E. C. G. Sudarshan. Equivalence of semiclassical and quantum mechanical descriptions of statistical light beams. *Phys. Rev. Lett.*, 10:277–279, Apr 1963. https://doi.org/10.1103/PhysRevLett.10.277.